Annual Guide to 47 Top Cameras

First up in our glorious parade, once again, are the 35mm SLRs, with a strong emphasis on the increasingly popular fully automatic models. Then come the rangefinders, the 120 roll-film SLRs in a trio of formats, followed by the 2¼ twin-lens reflexes, small press and, last but not least, the wonderful world of the miscellaneous that encompasses the best of the instant, the mini and the wide. To make the grade as one of our top 47, a camera must be the head of its family, sporting more advanced and interesting features than its companion models. New and/or unusual features were other keys to gaining admittance, allowing, for example, the Vivitar XV-3 to nose out such older, well-established cameras as the Praktica EE-2. That doesn't mean, of course, that those cameras we've left out are not top quality products. Pruning the number was a difficult task, often forcing us to drop an excellent camera for one from the same family with more noteworthy features. That's why you'll find the Olympus OM-2N listed instead of the well-received OM-10. Camera lines we've tested but that, so far, have not been able to pass "Modern Tests," also failed to make the cut. There's no strict pattern to these reports, so don't look for parallel comparisons. Some are condensed versions of our monthly "Modern Tests" reports, some concentrate on one outstanding feature that makes the camera unique. Then there are those that made the scene just before our deadline. We did manage to get our hands on them and can, therefore, give you a quick explanation of their operation and outer trappings. Among the latecomers we weren't able to lay hands on are the Pentax ME Super, Fujica AX-5 and Canon AF35M. Our regular, rugged test progrsms will follow within the next 12 months. As usual, the prices we've listed are those given to us at press time by the manufacturer or importer.

Asahi Pentax K2 DMD

TYPE: 35mm eye-level SLR.
LENS: 50mm f/1.4, f/1.2 or 55mm f/1.8 SMC Pentax in bayonet mount, stops to f/22, focusing to 18 in.
SHUTTER: Electronically-timed Asahi-Seiko metal-blade focal plane with speeds from 8 to 1/1000 sec. plus B, MX sync, self-timer.
VIEWING: Non-interchangeable eye-level prism with central split-image rangefinder microprism collar, full-focusing screen.
OTHER FEATURES: Silver-oxide battery-powered silicon photo-diode circuit with cells on either side of the viewfinder eyepiece measures center-weighted area of focusing screen at full aperture for automatic exposure (aperture preferred), provision for match-needle full-aperture exposure control, stop-down manual control with non-Pentax lenses using adapter, auto-exposure-compensation scale and warning signal, manual override, shutter speeds, apertures visible in the finder, under- and overexposure warning areas, hot-sync shoe, depth-of-field preview button, memory lock, provision for motor drive.
PRICE: $784.36 with 50mm f/1.2 Pentax, $688.26 with 50mm f/1.4 Pentax, $660.36 with 50mm f/1.7 Pentax.
MANUFACTURER: Asahi Optical Co., Tokyo, Japan.
IMPORTER: Pentax Corp., Englewood, CO 80110.
PHYSICAL DIMENSIONS: 5 11/16 in. wide, 3⅝ in. high, 3⅜ in. deep.
WEIGHT: 2 lb. 6 oz.

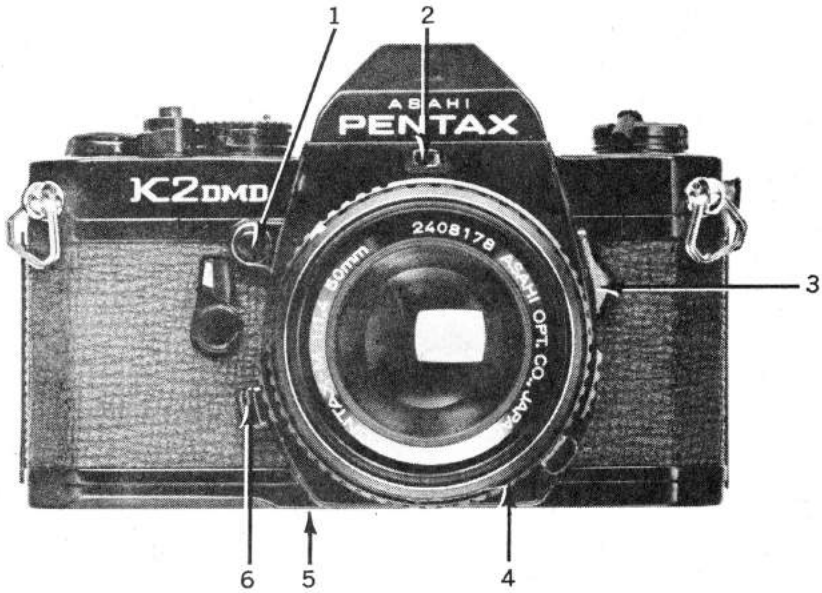

1. Stop-down button for previewing depth-of-field. **2.** Window permits aperture setting to be seen in finder. **3.** Mirror-lock-up lever. **4.** ASA indexing lever for setting film speed. **5.** Socket for motor-drive coupling. **6.** Lens-release lever. **7.** Shutter release/meter switch with lock. **8.** Rapid-wind lever. **9.** Shutter-speed dial shows manual settings, "Automatic" and viewfinder-blind setting. **10.** Hot shoe for sync with speeds up to 1/125 sec. **11.** FP, X sync terminals. **12.** ASA scale. **13.** Lug for setting exposure-compensation scale.

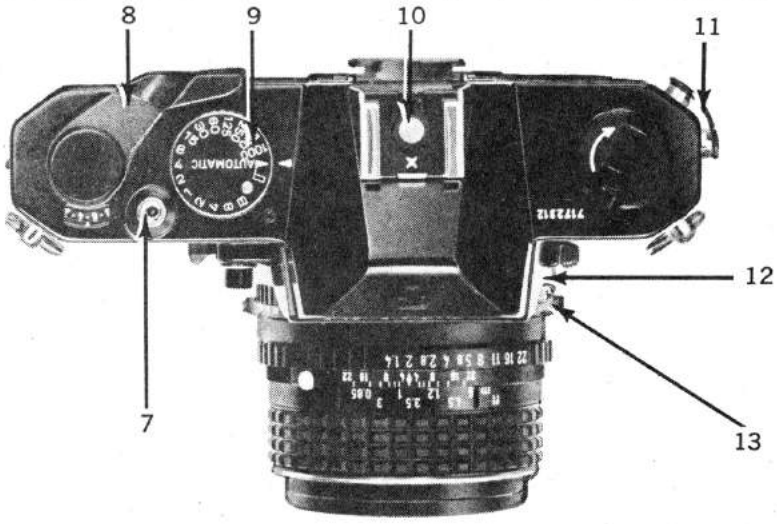

While Pentax, like many another 35mm SLR manufacturer, has joined the compact camera club with its M series, the larger and earlier K series lives on in the form of the K2 DMD. Why? Because some pros, and not a few amateurs, can't resist the feel of a bigger and what seems to them a more rugged camera. Besides looking like it longs for hard use, the K2 DMD comes replete with a host of features.

These features include many not found on the earlier-model K2: apertures visible in the finder as well as shutter speeds, orange warning signal in the finder when exposure compensation is used, built-in eyepiece blind, auto exposure hold, weak-battery shutter lock, split-image rangefinder in addition to microprism collar, interchangeable back to accept data back, provision for 2-frames-per-second accessory motor drive. Like the K2, the K2 DMD uses a ten-blade metal shutter developed by Seiko. This provides a top 1/125-sec. electronic flash speed, and with the center-weighted, super-fast-acting, extra-sensitive silicon photo-diode circuit, it allows automatic exposure to 8 sec. at full aperture even with an ASA 400 film. The K2 DMD provides the complete manual range of speeds from 8 sec. upwards, electronically controlled, with the meter still activated. Thus you can use the K2 DMD as a regular match-needle camera as well as in the automatic mode.

The bayonet mount has proved to be a fine one with excellent locking and unlocking systems that work both visually and by feel. Like all K and M cameras, only bayonet lenses will perform with a fully automatic diaphragm. Older screw-thread lenses can be used with a bayonet-mount adapter, but they must be closed down to shooting aperture manually, making them slightly slower to operate than the K lenses.

A dual-metering turn-on system provides either instant on-and-off metering by pressing the shutter release or permanent metering by pulling out the wind lever and pushing in the release. The method of setting the ASA index and the rather difficult-to-see exposure-compensation scale around the lens barrel requires some practice, and, therefore, they should be checked regularly to see that the exposure-compensation scale hasn't slipped.

Although the limitation of the motor drive to but 2 frames per second, in the face of competition providing from 3.5 to 5 frames per second, may be a bit disappointing to the lovers of photographic motorization, the K2 DMD is in every way a camera fit for the serious photographer.

Asahi Pentax ME

TYPE: 35mm eye-level SLR.
LENS: 50mm f/1.7, f/1.4, f/1.2 or 40mm f/2.8 SMC Pentax M in interchangeable bayonet K mount, stops to f/22, focusing to 18 in. (40mm f/2.8 to 24 in.)
SHUTTER: Electronically-timed Seiko MFC vertical-running metal blade focal plane with speeds from 8 to 1/1000 sec. set automatically only, manual mechanical 1/100 sec. plus B, X sync.
VIEWING: Fixed eye-level prism with central, split-image rangefinder, microprism collar, full-focusing screen.
OTHER FEATURES: Silver-oxide battery-powered gallium arsenic phosphorous photo diodes, on either side of the eyepiece, measure center-weighted picture area of focusing screen at full aperture for automatic exposure (aperture preferred), exposure compensation dial, shutter release lock, film box reminder slot, shutter speeds with over, underexposure signals visible with LEDs in finder, hot shoe, self-timer, accepts accessory motor winder.
PRICE: $484.16 with 50mm f/1.7, $572.00 with 50mm f/1.4, $668.33 with 50mm f/1.2, $497.30 with 40mm f/2.8.
MANUFACTURER: Asahi Optical Co., Tokyo, Japan.
IMPORTER: Pentax Corporation, Englewood, CO 80110.
PHYSICAL DIMENSIONS: 5¼ in. wide, 3¼ in. high, 3 3/16 in. deep.
WEIGHT: 1 lb. 7 oz.

While Asahi has now brought out an even more basic and easier to use auto exposure SLR, the MV, with no actual shutter speed indications at all, the ME remains the pioneer simplified SLR which can still satisfy a serious photographer. In place of the usual top shutter-speed dial is a control dial with only four positions: L for shutter lock, Auto for automatic exposure, 100X for the single 1/100 X-sync setting and B. Around the rewind knob, however, is an exposure-compensation dial providing ¼X to 4X auto-exposure compensation which can just about handle any difficult exposure situation that might occur.

The extremely bright and highly magnified viewfinder offers an excellent split-image rangefinder, microprism collar and full-focusing screen.

Within the picture area, at the left of the viewing screen, is a large vertical shutter-speed scale from 8 to 1/1000 sec. Slight pressure on the shutter release causes one of 16 bright light-emitting diodes to illuminate next to the shutter speed set. A stabilizer circuit prevents more than one diode lighting at a time or flickering. Whenever the shutter speed is more than a half stop away from a marked speed, the next diode lights. (Of course the actual shutter speeds set are stepless and if 1/177 sec. is needed, that is what would be set although the 1/125 sec. diode would light.) The display remains on until you take your finger from the release but it can be made to stay lit by pulling out slightly the well-shaped, smooth-operating plastic-tipped rapid rewind lever.

The gallium arsenic phosphorous cells react far more swiftly to light changes than CdS cells, and have no problem in being used for very low light photography even immediately after exposure to very bright light. A test of battery life revealed that the two tiny 1.5-volt silver cells could power the LED display continuously for over 50 hours, an incredible performance.

Auto exposure accuracy was judged extremely good throughout the range—well within ½ f/stop of 100 percent accuracy. Our camera provided exposures in excess of manufacturer's specifications—down to 8 sec. at f/1.4 with an ASA 400 film. Shutter noise and vibration were very low. The new plastic rod takeup spool was judged one of the easiest loading systems yet devised. Quality of construction and finish were of a very high order.

The six-AA-cell-powered auto winder ($149.50) fits beneath the camera after the coupling cover on the camera bottom is removed. Both single shot and continuous operation are possible with speeds up to 1.5 frames per sec.

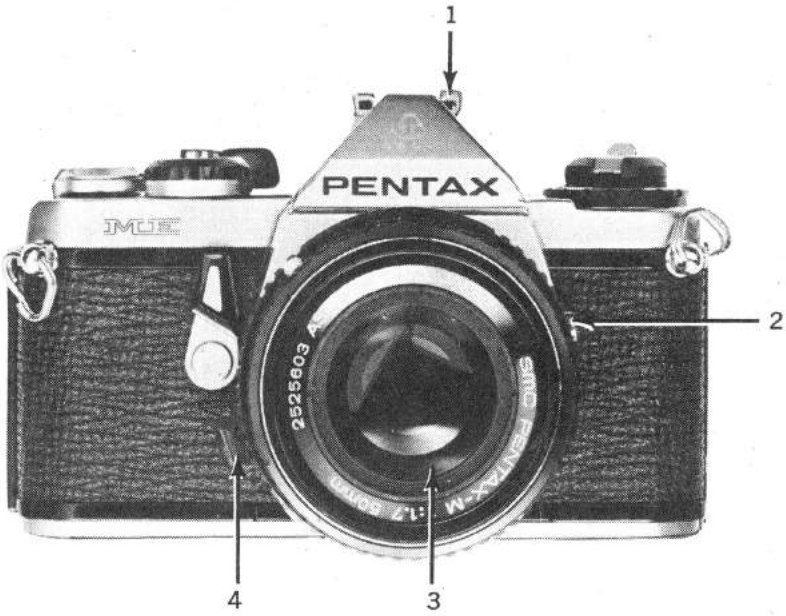

1. X-sync-only hot shoe. **2.** X sync PC terminal. **3.** Compact Pentax lens in K bayonet mount. **4.** Lens release lever. **5.** Exposure-control dial. **6.** Auto-exposure locking button. **7.** Rapid-wind lever. **8.** Shutter-wind indicator. **9.** ASA film speed window. **10.** Auto-exposure compensation dial.

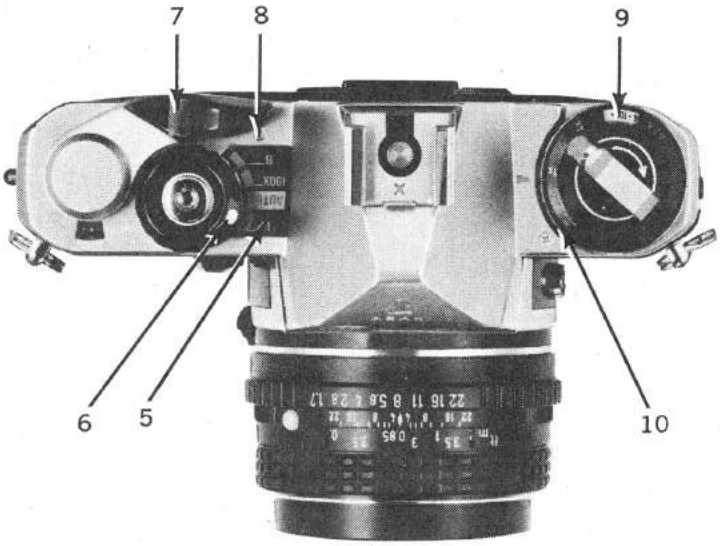

Canon A-1

TYPE: 35mm eye-level single-lens reflex.
LENS: 50mm f/1.8 Canon FD in interchangeable Canon breech-lock mount, stops to f/16, focusing to 24 in.
SHUTTER: Electronically-controlled cloth focal-plane with speeds from 30 to 1/1000 sec. plus B, X FP, M sync, electronic self-timer.
VIEWING: Fixed eye-level prism with service station interchangeable split-image rangefinder, microprism collar, full-focusing screen.
OTHER FEATURES: 6-volt silver-oxide-battery powered silicon diode cell above eyepiece measures slightly below center-weighted area of focusing screen at full aperture at ASA 6 to 12,800, choice of aperture priority, shutter-speed priority, full program or stop-down-aperture automatic exposure, auto-exposure-compensation scale, memory hold button, double exposure, motor winder and motor drive provision, locking electromagnetic release, battery-check button and diode, built-in viewfinder blind, back film box reminder holder, removable back, hot shoe for auto-coupling flash, depth-of-field preview, LED digital viewfinder readout of shutter speeds, apertures, under, overexposure, manual control, flash warning signals, accessory hand grip and spare battery container furnished.
PRICE: $611 with 50mm f/1.8; $680 with 50mm f/1.4 S.S.C. FD lens.
MANUFACTURER: Canon Camera K.K., Tokyo, Japan.
IMPORTER: Canon USA Inc., Lake Success, NY 11040.
PHYSICAL DIMENSIONS: 5½ in. wide, 3½ in. high, 3¼ in. deep.
WEIGHT: 1 lb. 14 oz.

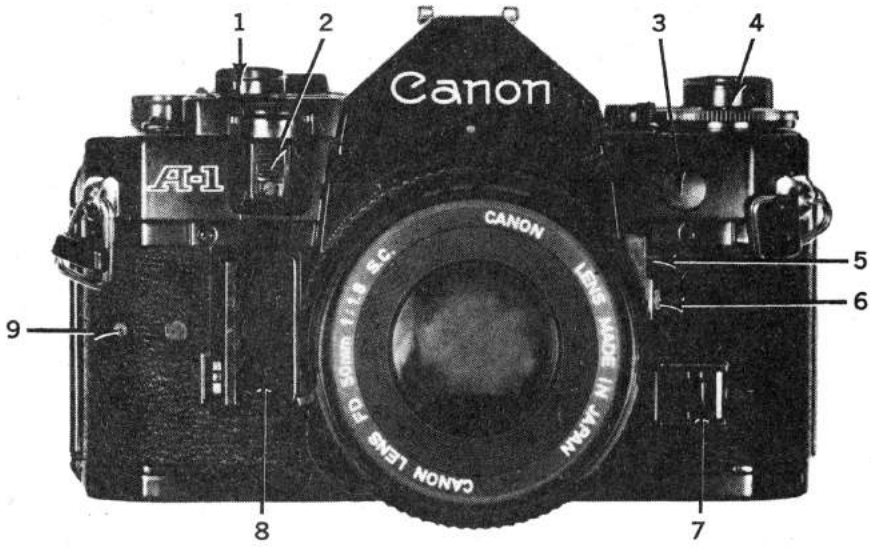

1. Electromagnetic shutter release. **2.** Aperture-time dial cover. **3.** PC terminal cover. **4.** Rewind crank. **5.** Exposure-hold button. **6.** Exposure-preview button. **7.** Stop-down-metering lever. **8.** Battery compartmant. **9.** Hand grip attachment socket. **10.** Shutter-release lock. **11.** Self-timer lever. **12.** Wind lever. **13.** Exposure-mode selector. **14.** Shutter-speed/aperture scale. **15.** Dedicated flash contacts/hot flash shoe. **16.** Battery-check button. **17.** LED display switch/battery check light. **18.** ASA/exposure-compensation dial.

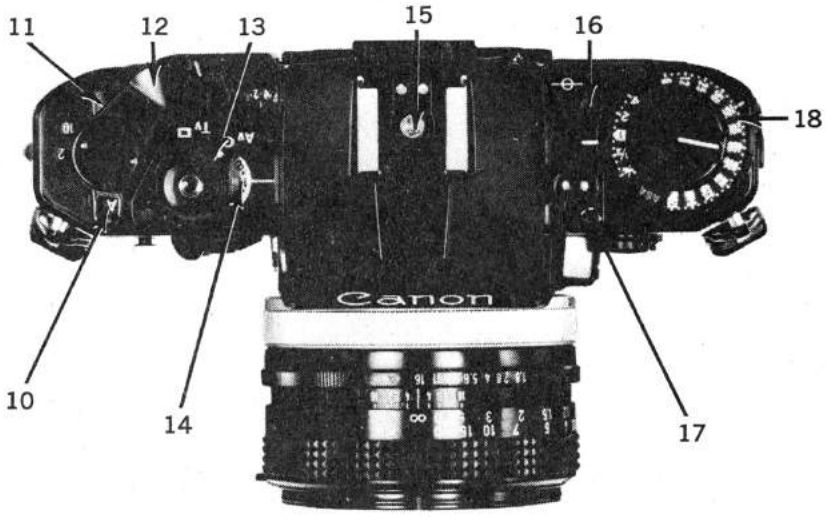

A superb example electronics and optics integrated into a functional, fully automatic, multi-mode package, the Canon A-1 is regarded by many as today's most advanced 35mm SLR.

Pick up this remarkably light camera, look through the viewfinder while pressing slightly on the ultra-smooth magnetic shutter release and you will see what may be the future for most SLR cameras.

Below the focusing screen, in bright red calculator-type numerals are displayed the shutter speed set and the aperture set. Swing the camera from a light to a dark area, and the numbers magically change. Although the actual exposure is continuously variable in aperture and stepless in actual shutter speeds, the digital readout provides half f/stops and mid-shutter speeds all the way from f/1.4 to f/32 and from 30 sec. to 1/1000 sec. Switch to manual operation and an M appears; use a fully-coupled flash unit and an F appears when the unit is fully recycled; shift to a bulb exposure and the word "bulb" appears; into over- or underexposure and the appropriate aperture or shutter-speed numeral flashes in warning; foul up your settings and a bright string of EEEEEEs appears. In bright light, the numerals are at their most brilliant but dim in four stages as subject light diminishes, for comfortable viewing.

The A-1's incredible finder readout system is exceeded only by its variety of auto exposure possibilities. Instead of a conventional shutter-speed dial there's an overhanging "aperture time" dial on the front which lets you set apertures or shutter speeds which are read out in a window on top, and a mode selector switch is settable for aperture- or shutter-preferred auto exposure, for completely programmed automation, or conventional manual settings. For the complete story see "Modern Tests," July 1978, page 122.

In terms of handling, we found the well-finished, all-black camera with its highly durable, almost scratchproof plastic top and bottom plates fit well into the hands of everyone who tried it.

The view through the finder is bright, with good contrast. The central rangefinder worked well with lenses up to f/5.6.

The Canon A-1 clearly represents Canon's direction for the future. It's a bold, brave step, and Canon is to be congratulated on its well-thought-out offering.

Canon AE-1

TYPE: 35mm eye-level SLR.
LENS: 50mm f/1.8 Canon FD in interchangeable Canon breech-lock bayonet mount, stops to f/16, focus to 24 in.
SHUTTER: Electronically-controlled cloth focal-plane with speeds from 2 to 1/1000 sec. plus B, X sync, electronic self-timer.
VIEWING: Non-interchangeable eye-level prism with split-image rangefinder, microprism collar, full-focusing screen.
OTHER FEATURES: Single silicon photocell above eyepiece measures center of field at full aperture for fully automatic (you set shutter speed, camera sets aperture) exposure, manual override, auto-exposure compensation, aperture scale, underexposure warning diode, manual diode signal in the viewfinder, hot shoe, depth-of-field preview lever, battery check, film reminder slot, provision for power winder, camera-setting auto-exposure flash unit.
PRICE: $451 with 50mm f/1.8 lens.
MANUFACTURER: Canon Camera Co., Tokyo, Japan.
IMPORTER: Canon USA, Inc., Lake Success, NY 11040.
PHYSICAL DIMENSIONS: 5¾ in. wide, 3¾ in. high, 3½ in. deep.
WEIGHT: 1 lb. 13 oz.

The AE-1, which started the popularity of the auto exposure camera with winder and dedicated flash, enters 1980 with a new type of lens mount, a variation on the standard Canon breech-lock which retains many of its good features but adds the compactness and speed of change of the bayonet. This is a change on the lens itself. Both new lens mounts and old will fit present and past Canon AE-1s, a triumph of compatibility. The popularity of the AE-1 is understandable. It offers a fine combination of automation, electronics, accessory power winder and auto-coupling flash unit. And this is backed up by one of the most complete lens and accessory lines of any SLR manufacturer.

The camera body itself is small for Canon although not as miniaturized as an Olympus or Pentax ME. However, with its plastic-barreled f/1.8 lens, the AE-1 weighs but 29 oz., very close to the weight of the Olympus OM-1 or 2.

The camera holds and operates most conveniently. By exerting slight pressure on the shutter release, you turn on the metering circuit. The aperture pointer immediately swings to the to-be-set lens opening (alas there is no shutter-speed scale in the finder). If the shutter speed is insufficient for proper exposure even at full aperture, a red warning diode blinks in the finder. If you turn your lens off the automatic exposure setting, a big red M starts pulsating in the finder to warn you that you are in the manual exposure mode. However, it is somewhat inconvenient to attempt setting shutter speeds while keeping the exposure circuit on in this manner. Therefore, Canon has built in an exposure preview button atop the camera which activates the meter the same way as the shutter release. Another button provides 1½ f/stops additional exposure for backlit and similar situations. There is a third button which, when pressed, acts as a battery check. There is, further, a depth-of-field control and release button, nice to have but less convenient to use than those on other cameras.

The finder view is adequately bright, the contrast good, the microprism collar reliable with lenses of f/4 or larger, the split-image rangefinder can be used for all lenses down to f/8. At smaller apertures, the field-focusing screen should be used rather than the rangefinder or collar. What should be of particular interest to eyeglass wearers is that they will be able to view the entire focusing screen without difficulty.

While we found setting shutter speeds not too easy, this was a minor drawback compared to the many other Canon assets such as the electronic self-timer which winks at the subject during operation to warn that it's working, the easily-attached power winder and the provision for automatic flash which actually sets the camera's shutter to the proper speed and the lens to the correct aperture.

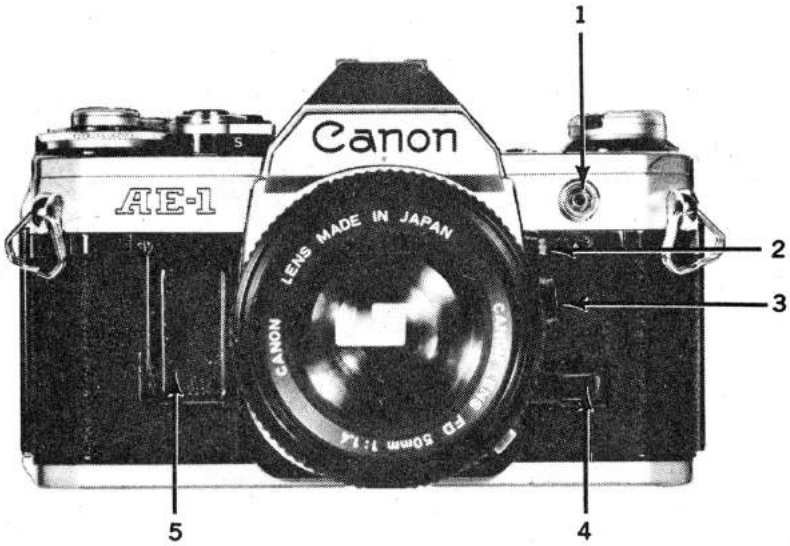

1. X-sync PC terminal. **2.** Auto exposure-compensation button provides 1½ f/stops additional exposure. **3.** Exposure preview button. **4.** Depth-of-field preview lever/stop down metering switch. **5.** Battery compartment houses 6-volt battery, also serves as handy finger grip. **6.** Shutter-speed dial. **7.** Ratcheted 120° multistroke wind lever. **8.** Battery check button. **9.** New breech lock bayonet lens-mount. **10.** Electromagnetic shutter release also turns on metering. **11.** ASA film-speed index scale window with indices from 25 to 3200. **12.** Combined self-timer/shutter lock lever.

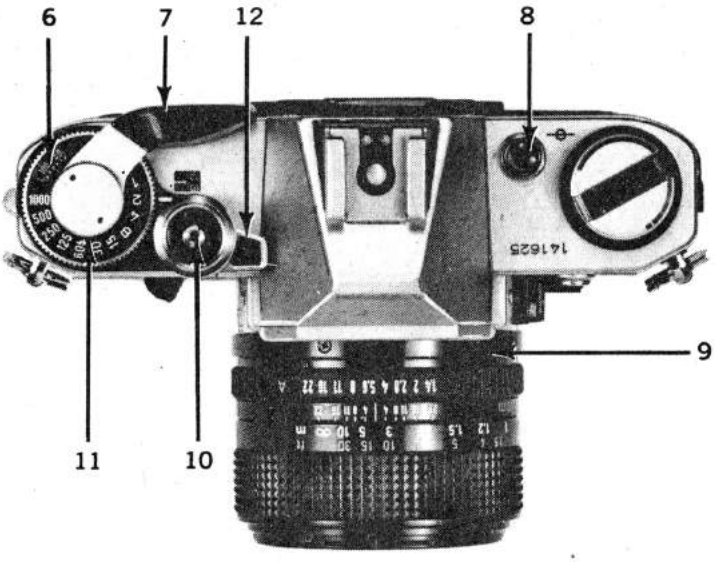

Chinon CE-4 Memotron

TYPE: 35mm eye-level single-lens reflex.
LENS: 50mm f/1.4 or f/1.7, 45mm f/2.8 Auto Chinon in interchangeable Pentax K bayonet mount, stops to f/22, focusing to 18 in.
SHUTTER: Electronically-timed Seiko MFC-846 metal blade focal plane with speeds from 4 sec. to 1/1000 sec. manual, 8 sec. to 1/1000 sec. auto, plus B, X sync.
VIEWING: Non-interchangeable eye-level prism with central split-image rangefinder, microprism collar, full-focusing screen.
OTHER FEATURES: Silver-oxide battery-powered silicon-blue-cell circuit reads center-weighted area of focusing screen at full aperture for automatic exposure (aperture-preferred) control, auto-exposure-compensation dial, exposure memory hold, all manual shutter speeds, shutter speeds, over- and underexposure warning signals in viewfinder, LED battery check, hot shoe, electronic self-timer, provision for power winder, provision for dedicated coupled autoflash.
PRICE: $507.55 with 50mm f/1.4 MC lens.
MANUFACTURER: Chinon International Corp., Tokyo, Japan.
IMPORTER: Chinon Corp. of America Inc., Springfield, NJ 07081.
PHYSICAL DIMENSIONS: 5¼ in. wide, 3⅜ in. high, 3½ in. deep.
WEIGHT: 17 oz. (body only).

1. Depth-of-field preview lever usable for making stop-down auto exposures. **2.** Electronic, two-position, cancellable self-timer. **3.** Lens release lever. **4.** Pentax-type bayonet mount lens. **5.** Auto exposure memory lock button. **6.** Non-ratcheted film-advance/shutter-cocking lever. **7.** Hot shoe with provision for flash unit to set sync shutter speed. **8.** Contact point for coupled autoflash unit. **9.** ASA scale lock release button. **10.** Auto exposure compensation dial. **11.** ASA film speed setting scale. **12.** ASA film speed lock release button. **13.** Lens aperture control ring. **14.** Depth-of-field scale. **15.** Lens focusing scale in feet and meters. **16.** Shutter release button. **17.** Multiple exposure control switch.

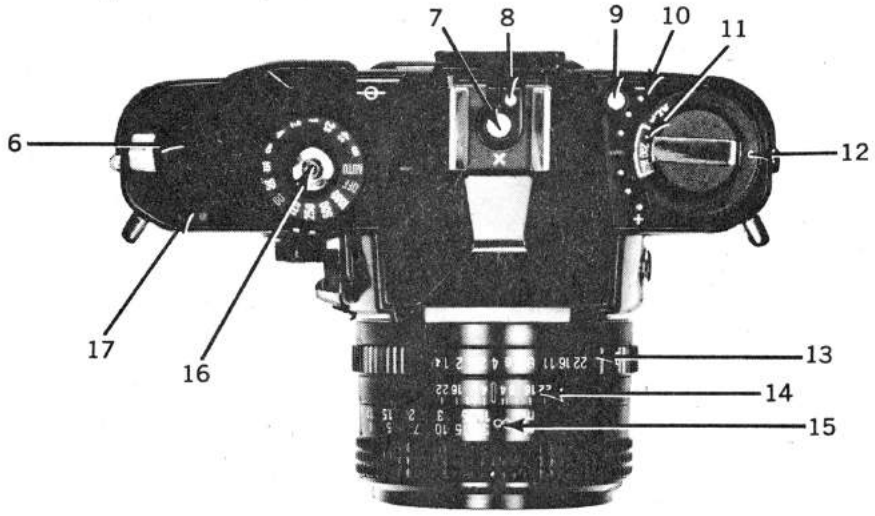

The Memotron is the latest and best family group to emerge from the Chinon factory, which has turned out many a model under its own and other brand names. The fourth Memotron is also a first—the first Chinon SLR to use the increasingly-popular Pentax bayonet (K) lens mount. It thus replaces, in more ways than one, all previous Chinons which have relied on the tried and true Praktica/Pentax M42 single-pin, screw-thread lens mount.

But the CE-4 represents more of a departure from the norm than a mere change in lens mount. Within the confines of the somewhat familiar shell of this omnipresent camera maker, Chinon has fashioned a modern, compact, automatic SLR with the help of a generous infusion of electronic technology. To get the CE 4, you take the CE 3—a basic aperture-preferred auto—and add the following:

Full aperture metering—another first for Chinon. If you want to use the existing screw-mount lenses (and you can with an adapter) you'll have to settle for stop-down measuring. More changes are apparent when you look through the viewfinder. The required shutter speed scale runs vertically up from the lower left corner, accompanied by a series of LEDs that light up in varying degrees of intensity (depending on brightness of finder) to indicate the speed being set by the silicon blue cell meter. That meter accommodates film speeds from ASA 25-3200 which are set on a scale (11) around the hub of the rewind crank. You can get ±1 stop compensation in ⅓ stop increments in the auto exposure mode by pressing the small release button (9) and aligning the set ASA with the scale (10) alongside the finder housing.

The electronic self-timer (2), located conventionally on the front, is another first, for both Chinon and for the camera industry as well. As with most electronic timers, it relies on a blinking red LED to signal expectant subjects and can be cancelled in mid-blink. But it also has a two-position setting so that it can be set for either a 5- or 10-sec. interval.

Examining the CE-4 top and bottom reveals the fact that this model is designed to fit into the growing Chinon SLR system. A tell-tale contact point (8) inside the hot shoe (7) indicates the existence of a dedicated flash unit. As a matter of fact, Chinon has two (the S-240 and S-280), which set the CE-4's shutter speed automatically. On the bottom you can spot the required contacts permitting use of this camera with Chinon's already established PW-530 autowinder.

Useful holdovers from previous Chinons include multiple exposure provision (17) and a memory lock (5) for auto exposure operation.

Contax RTS

TYPE: 35mm eye-level single-lens reflex.
LENS: 50mm f/1.4 Carl Zeiss Planar in bayonet mount, stops to f/16, with focusing to 18 in.
SHUTTER: Electronically-timed cloth focal plane with speeds from 4 to 1/2000 sec. plus B, MX sync., self-timer with 8-sec. shutter delay.
VIEWING: Non-interchangeable eye-level prism with interchangeable screen having central microprism, fine-focusing collar, full-focusing screen.
OTHER FEATURES: Single silver-oxide-battery-powered. A silicon photo-diode circuit with cell above the viewfinder eyepiece measures center-weighted area of entire focusing screen at full aperture, full automatic electronically-controlled exposure, provision for match-needle-diode full-aperture exposure control, full manual override, auto-exposure-compensation warning in finder, hot sync shoe, depth-of-field preview button, mirror-lockup lever, battery-check light, provision for motor drive.
PRICE: $814 with 50mm f/1.4 Zeiss Planar lens.
MANUFACTURER: Yashica Co., Ltd., Tokyo, Japan.
IMPORTER: Yashica Inc., Paramus, NJ 07562.
PHYSICAL DIMENSIONS: 5⅝ in. wide, 3½ in. high, 3⅝ in. deep.
WEIGHT: 2 lb. 3½ oz.

Some of us would be hard put to resist any SLR that accepts Carl Zeiss lenses, but the Contax RTS is more than just any SLR. It's an intelligently and handsomely designed, electronically-controlled camera incorporating such progressive features as an auto-winder and an electronic shutter release that's a joy to press.

A joint effort between Yashica and the fine German optical firm of Zeiss, the Contax pioneered many progressive ideas that we now find in other SLR cameras.

While the Contax isn't the first camera to accept a detachable auto winder, it is the camera which really kicked off the current Japanese proliferation of those simplified electric motor-drive accessories. Similarly, short-stroke, light-action, micro-switch shutter releases aren't exactly new, but they're obviously better, and here, too, the RTS is a trend-setter.

Of course, there are many more advanced features in this highly professional 35mm SLR, but you can't appreciate the real advantages of the Contax until you hold the camera in your hands. The handsome-looking body (designed by the same Bauhaus group which designed the Porsche car), wasn't created just for appearance's sake. It fits so comfortably in your hands it almost becomes part of them.

Briefly, the camera is an electronically-controlled, aperture-preferred (you select the aperture, the camera selects the shutter speed) fully automatic single-lens reflex.

The bright, crisp finder provides a shutter-speed scale at the right, each speed having its own light-emitting diode. As the shutter speed is selected by the almost instantaneously-acting SPD (silicon photo-diode) metering system, one or two diodes light up at the press of a convenient front display button, showing the speed set. An aperture scale atop the screen shows the selected opening. With manual speeds, the diodes continue to operate. A transparent pointer shows the speed you select so you can choose to either match the diode or not, depending on the lighting conditions.

All controls are silky smooth. The shutter-speed dial is around the rewind knob which we judged to be an even more convenient location than the usual right-top position on most cameras. Eyeglass wearers can see the entire focusing and viewing area. All engraved numerals are usually large and clear. There's a two-shot-per-sec. motor which attaches to the bottom of the camera in 5 sec. A complete series of less expensive Yashica-made lenses will complement the Zeiss designs. All things considered, the Contax RTS represents a high level of electronic and optical sophistication in 35mm camera design.

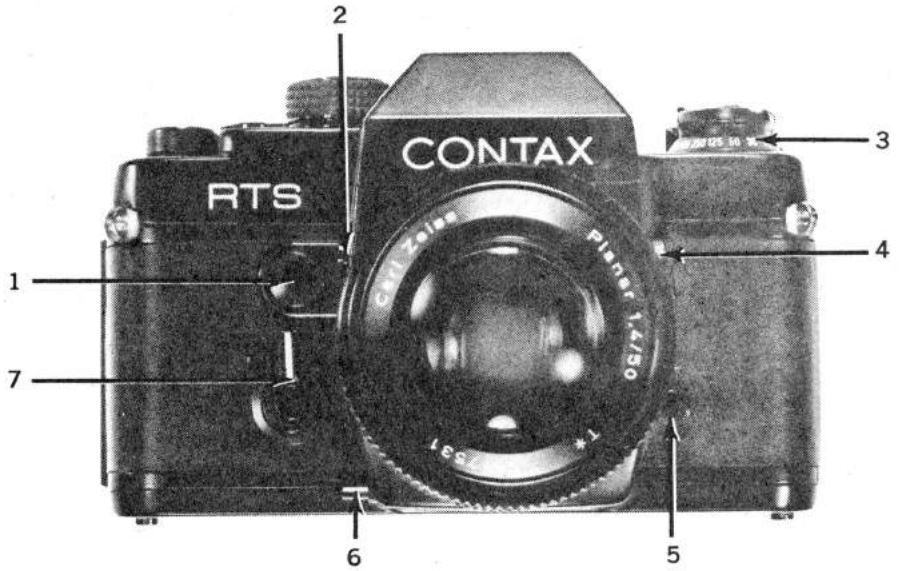

1. Push button for lighting LED display showing auto shutter speed set in viewfinder. **2.** Lens release button. **3.** Shutter-speed dial for 4 to 1/2000 sec. plus B. **4.** Mirror lock-up lever. **5.** Sync terminal for MX flash. **6.** Depth-of-field preview button. **7.** Self-timer with 8-sec. delay time. **8.** Single-stroke wind lever. **9.** Red diode battery-check light. **10.** Exposure-compensation scale. **11.** ASA index scale for film speeds 15 to 3200. **12.** Short-stroke magnetic-switch shutter release.

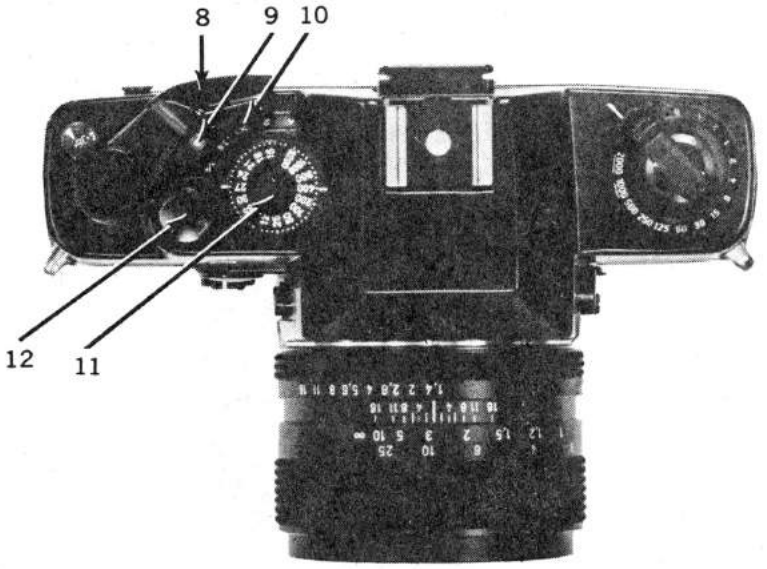

Contax 139

TYPE: 35mm eye-level single-lens reflex.
LENS: 50mm f/1.7 Carl Zeiss Planar in interchangeable bayonet mount, stops to f/16, focusing to 2 ft.
SHUTTER: Electronically-controlled Copal CMS metal blade focal plane with speeds from 4 to 1/1000 Sec. (from 1 sec. on manual) plus B, X sync, electronic self-timer.
VIEWING: Non-interchangeable eye-level pentaprism with central split-image rangefinder, microprism collar, full-area fine focusing screen.
OTHER FEATURES: Two 1.5-volt silver oxide batteries power two silicon photodiodes (SPDs), one reading a center-weighted area of the viewing screen for continuous illumination and a second reading from the film during exposure for auto electronic flash (you set aperture, camera sets shutter speed), auto-exposure compensation dial, memory lock, full manual control, aperture visible in finder window, shutter speeds shown by scale with 16 diodes, manual speeds shown by pulsating diodes, green flash ready and flash O.K. diode signal, electromagnetic shutter release, provision for remote electronic cable release, provision for multiple exposures, removable back with memo holder, depth-of-field preview, hot sync flash shoe with provision for special flash unit coupling, provision for auto winder.
PRICE: To be announced.
MANUFACTURER: Yashica Co., Ltd., Okaya, Japan.
IMPORTER: Yashica, Inc., Paramus, N.J.
PHYSICAL DIMENSIONS: 5 5/16 in. wide, 3⅜ in. high, 3½ in. deep.
WEIGHT: 1 lb. 10 oz.

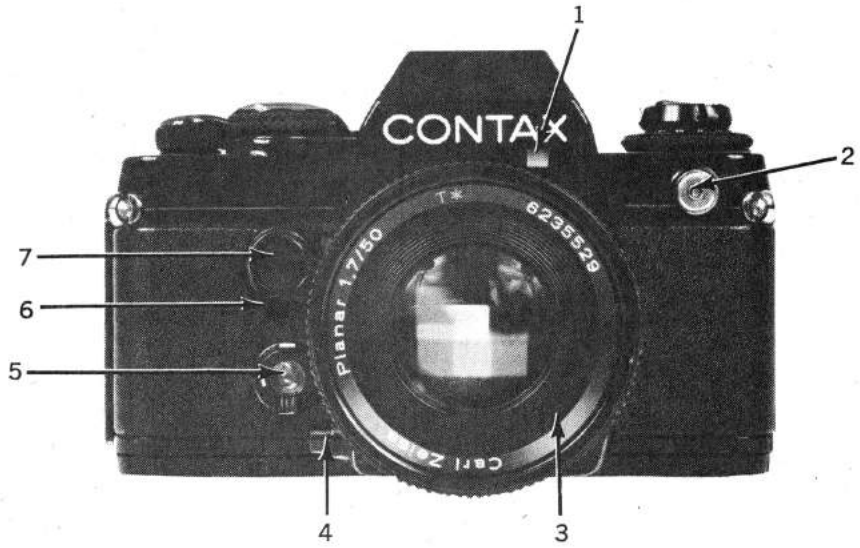

1. Finder aperture scale illuminating window. **2.** PC sync terminal. **3.** Zeiss Planar lens in Contax-Yashica bayonet mount. **4.** Depth of field preview button. **5.** Electronic self timer with diode warning signal. **6.** Exposure memory hold lever. **7.** LED display turn-on button. **8.** ASA dial. **9.** Auto exposure compensation dial lock release. **10.** Hot shoe with coupling for through lens metering flash. **11.** Shutter speed dial lock release button. **12.** Shutter speed dial. **13.** Lens release lever. **14.** Auto exposure compensation dial. **15.** Shutter release.

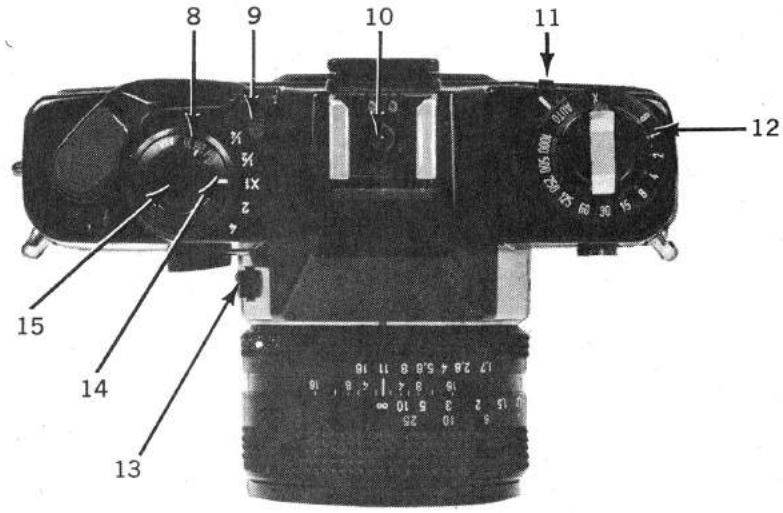

The Contax 139 Quartz will probably be the handsomest true compact SLR around. It should be available in mid-1980.

The 139 Quartz (quartz because its electronic circuitry is controlled by a quartz crystal oscillator unit) is provided with two completely separate metering systems: one silicon photo-diode circuit reads a center-weighted area of the focusing screen for all continuous light picture taking, and a second within the camera body measures the electronic flash right from the film during the exposure. A green flash ready signal in the viewfinder remains on after exposure if there was sufficient electronic flash for proper picture taking. This means that with the Contax flash unit you can get correct exposure on camera, off, bounce, through bellows, microscopes, or whatever—an advantage the 139 Quartz shares only with the Olympus OM-2 and OM-2N.

Besides indicating the aperture set in a small window atop the very bright focusing screen, the 139 Quartz viewfinder features a large shutter-speed scale with 16 ultrabright red diode indicators, over and underexposure pulsing diodes, a flash speed pulsing diode, plus pulsing diodes indicating manual speeds set. To conserve battery energy, the 139 Quartz makes use of a diode turn on switch which lights up the LEDs for 10 sec. You can push it again if you wish. The system makes it impossible to leave the LEDs on, thus inadvertently draining the batteries (which are also needed to operate the shutter).

The camera has exposure options: memory hold lock, plus ¼ to 4X auto exposure compensation. What will strike you as a user is the superb way the camera fits your hand, and how beautifully every control has been contoured to match each finger position. Our only operational criticisms are lack of an eyepiece blind and a ratcheted rapid wind lever.

Shutter noise was remarkably low for a metal blade focal plane, the split-image rangefinder and microprism collar highly effective. The entire finder area and controls can be seen by eyeglass wearers. Disadvantages? The 139 Quartz does not have interchangeable focusing screens, a 1/2000 sec. top shutter speed, a mirror lock-up lever, or a separate battery check light. And while the camera accepts its own excellently contoured 2-fps motor winder operating on four AA batteries, the use of a metal blade shutter probably rules out a future high-speed motor drive unit.

Fujica AZ-1

TYPE: 35mm eye-level single-lens reflex camera.
LENS: 43-75mm f/3.5-4.5 Fujinon Z in interchangeable thread mount, stops to f/22, focusing to 4 ft.
SHUTTER: Electronically-timed cloth focal plane with speeds from ½ to 1/1000 sec., mechanically-timed speeds 1/60, 1/250, 1/1000 sec. plus B, X sync, electronic self-timer.
VIEWING: Non-interchangeable eye-level prism with split-image rangefinder, microprism and fine-ground collars, full-focusing screen.
OTHER FEATURES: Silicon blue cells on either side of eyepiece measure center-weighted picture area of focusing screen at full aperture for fully automatic (you set aperture, camera sets shutter speed) exposure, manual override, auto-exposure compensation, shutter speed with diode light indication in finder, hot shoe, shutter-release lock, provision for auto winder and camera-setting auto-exposure flash unit.
PRICE: $535.
MANUFACTURER: Fuji Photo Film Co., Ltd., Tokyo, Japan.
IMPORTER: Fuji Photo Film U.S.A., Inc., New York, NY 10001.
PHYSICAL DIMENSIONS: 5¼ in. wide, 3½ in. high, 4⅜ in. deep.
WEIGHT: 1 lb. 14 oz.

Fuji's first foray into the world of the compact, electronically-controlled automatic aperture-preferred SLR was noteworthy, in part, for giving you the option of a zoom as the normal lens. But that's not all. The AZ-1 appeared as part of a full-blown system, including an accessory four-AA battery Auto Winder and the Auto Strobo AZ, a dedicated, coupled auto electronic flash unit.

The AZ-1's shutter, if a tiny bit louder than some of its competitors, is still one of the quietest, least subject to vibration in any SLR. Its finder has three-way focusing and a vertical shutter-speed scale at the right with seven accompanying red diodes. Speeds are marked in black from 1/1000 down to 1/30 while one red cluster indicates the 1/2-1/15 sec. range. Slight pressure on the shutter-release button (5) turns on the meter circuit, illuminating one of the diodes that gives you an approximate speed (such as 1/92 sec.) on the stepless electronically-controlled shutter.

Fuji has incorporated a unique (for an aperture-preferred auto SLR) memory-hold device, activated by slight pressure on the shutter release to freeze the meter's reading. Obviously, Fuji wants you to resort to a tripod or other steadying device for speeds below 1/15, since you can never tell exactly where the shutter is being set in the 1/2-1/15 range. We would like to have seen an extra diode setting for 1/15 sec.

In addition to straight auto-exposure control, during which you match the shutter-speed dial's large orange AE arrow (8) to the heavy red line (13) on the camera top, the AZ-1 offers two alternatives. For special situations calling for more or less exposure, you can turn the dial up to two f/stops in either direction. There are four manual mechanical shutter-speed settings, but the dial does not have a lock.

All Fujica 2½-turn, set-to-lock thread mount lenses provide full focusing-aperture automation, but you can get auto exposure at shooting aperture with any other Pentax-type screw-thread lens. To remove the Fujica lens you must first release it by pushing in on the small lever (2) on the side. To make a reading with other-brand lenses, you press the depth-of-field preview button (4) on the front while adjusting the aperture-control ring (11).

The smaller aperture of the zoom lens affects brightness, of course, but with one of the conventional normal lenses the image is very bright. In operation the plastic-tipped wind lever (7) provides a smooth, short, non-ratcheted 140° stroke. The self-timer (3) needs 8 sec. to complete its job. Halfway through that period, it automatically turns on the auto exposure system, thereby solving the problem of having to activate the meter by pressure on the shutter release button.

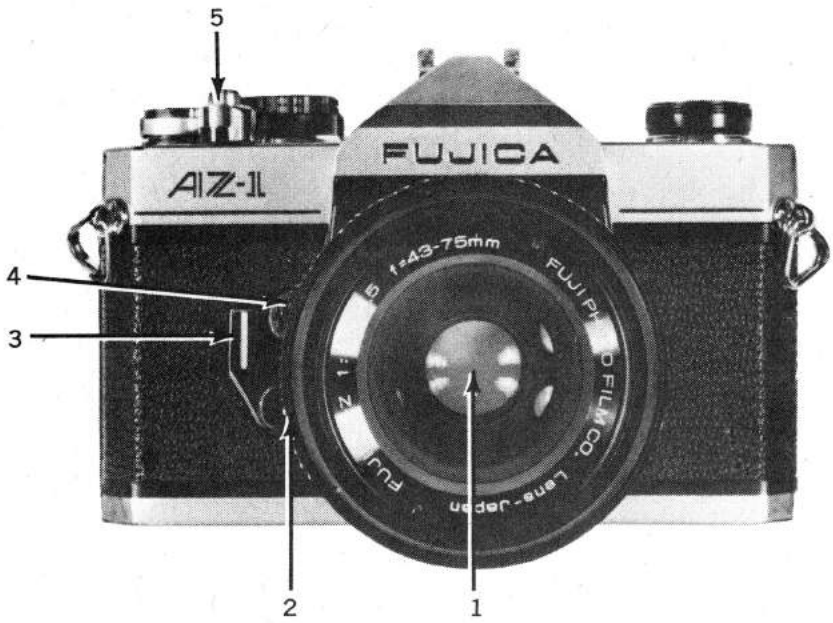

1. Normal zoom lens. **2.** Lens-release lock. **3.** Self-timer. **4.** Depth-of-field preview button. **5.** Shutter release. **6.** Shutter-release lock. **7.** Film-advance lever. **8.** Shutter-speed/auto exposure-control dial. **9.** Hot shoe. **10.** Battery-compartment cover. **11.** Aperture control ring. **12.** Combined focus-zoom control ring. **13.** Auto exposure index.

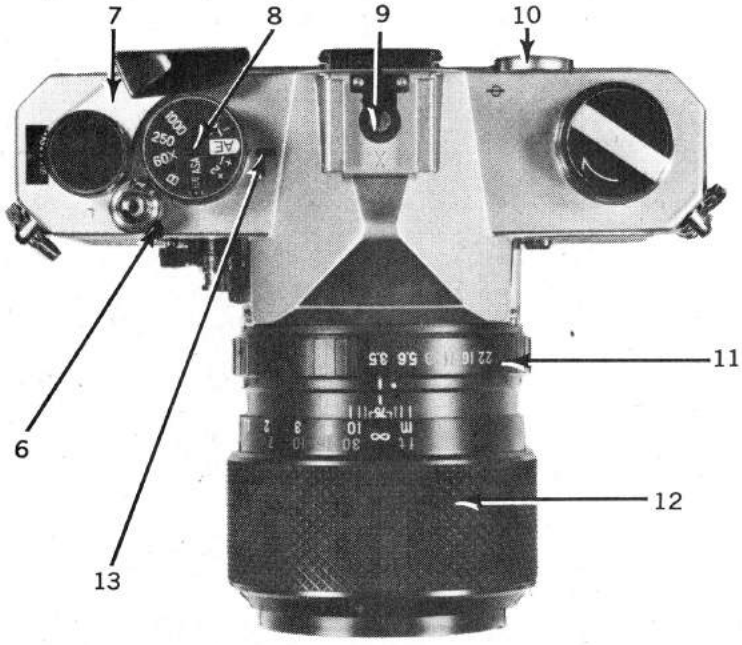

Konica Autoreflex TC

TYPE: 35mm eye-level single-lens reflex.
LENS: 40mm f/1.8 Hexanon in Konica bayonet mount stops to f/22, focusing to 18 in.
SHUTTER: Metal-blade Copal Square-FC focal plane with speeds from ⅛ sec. to 1/1000 sec. plus B, X sync, self-timer.
VIEWING: Fixed eye-level prism with split-image rangefinder, microprism collar, full-focusing screen.
OTHER FEATURES: Mercury battery-powered CdS circuit with cells on either side of eyepiece measures weighted area of viewing screen at full aperture; ASA 25-1600; fully automatic exposure; shutter-speed-preferred operation; exposure scale, over and underexposure signals, maximum-aperture lens indication, manual warning signal in viewfinder; hot shoe; locking shutter release; auto sync switch in shoe.
PRICE: $348 with 40mm f/1.8 lens, $418 with 50mm f/1.4 lens, $528 with 57mm f/1.2 lens.
MANUFACTURER: Konishiroku Photo Inc. Co., Tokyo, Japan.
IMPORTER: Konica Camera Co., Woodside, NY 11377.
PHYSICAL DIMENSIONS: 5⅛ in. wide, 3⅜ in. high, 3 7/16 in. deep.
WEIGHT: 26 oz.

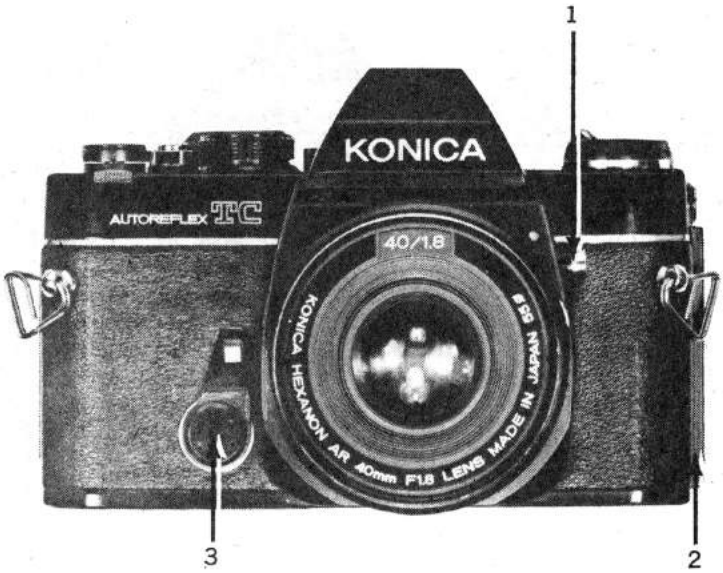

1. Lens-lock release button. **2.** Back-release latch. **3.** Self-timer. **4.** Meter "off" switch/shutter-release lock. **5.** Wind lever/meter "on" switch. **6.** Shutter-speed dial. **7.** Sync terminal. **8.** AE locking pin. **9.** Shutter release.

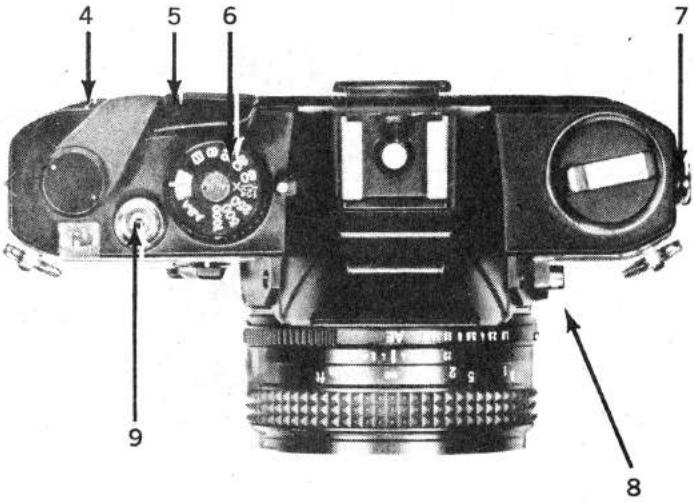

In the widening arena of compact, lightweight automatic SLRs, the Konica Autoreflex TC remains a stiff competitor and a far cry from the well-made but largish-bodied complicated contours of earlier Konica Autoreflexes. The Konica Autoreflex TC, which replaces the recently discontinued Konica Autoreflex T4, sports diminutive size, lighter weight, handsomer lines and soft semi-padded leatherish covering, with innards basically much the same as the T4.

In getting under way with the TC, a short pull on the rapid-wind lever away from the camera body turns on the metering system, which is powered by two PX-13 or 625 mercury cells located under a large bottom cover. Once the circuit is on, it can only be turned off by pressing an "off" switch located at the camera back, which snaps the winder lever back to the original carrying position as well.

The automation of the camera remains, as with the T4, one of the very best and perhaps the simplest for the general photographer to understand and use. You just switch your lens to the AE position (marked in green), where it locks in place, and then set whatever ASA and shutter speed you wish. The aperture indicator within the finder will show the aperture you'll get. There are red warning areas of over and underexposure and a movable red warning area which indicates the maximum f/stop of your lens and also shows the correct meter-coupling limits for any given shutter-speed/ASA-index combination. The large size of the numerals and generous scale area remain an example of good design. The finder itself has good contrast, is adequately bright, and has efficient focusing. Eyeglass viewers will be able to see the entire screen with no great difficulty.

The TC loads like other Konicas; you pull downwards on a bottom left-hand catch, which causes the back cover to spring outwards. Because of the bottom plate cutout, there is no need to pull the rewind knob upwards to load—the cartridge just slips in from the bottom. Lens removal remains similar to other Konica reflexes, which is not surprising, since the same wide range of Hexanons is used. While there are slight changes noticeable in the mirror chamber (like squared-off mirror edges and simplified mirror swing-up arms), the basic configurations, including very good ribbed anti-flare baffling, remain the same as on other Autoreflexes.

In field testing, the camera impressed us all, particularly Konica enthusiasts who were desirous of acquiring the simple, easy-to-operate-and-use body. Consistent with our lab finding of the camera's shutter speed and metering accuracy, our slides were well exposed. Konica has provided an exceptionally likable, convenient, fully automatic camera at an amazing price for today's highly inflated times.

Konica FS-1

TYPE: 35mm eye-level SLR.
LENS: 40mm f/1.8 Hexanon AR in Konica bayonet mount, stops to f/16, focusing to 17.7 in.
SHUTTER: Electronically controlled Copal CMS metal-blade focal-plane with speeds from 2 to 1/1000 sec. plus B, X sync, self-timer.
VIEWING: Non-interchangeable eye-level prism with split-image rangefinder, microprism collar, full focusing screen.
OTHER FEATURES: Built in, battery-powered motor drive with auto wind to first exposure, auto film take-up, shutter speed preferred auto exposure (you set the speed, the camera sets the aperture), manual override, four alkaline energizer AA cells in handgrip power winder, shutter and Gallium Arsenide Phosphide photodiode metering circuit reading a center-weighted exposure from the focusing screen at full aperture, diodes in finder indicate aperture set, over, underexposure warning, manual operation, flash ready for dedicated X-24 Auto Electronic flash unit; electromagnetic shutter release with remote electronic release provision, blinking electronic self-timer, hot flash shoe, shutter-release lock, film box memo holder, viewfinder battery check, LED film-wind indicator.
PRICE: $555.
MANUFACTURER: Konishiroku Photo Industry Co. Inc., Tokyo, Japan.
IMPORTER: Konica Camera Co., Woodside, N.Y. 11377.
PHYSICAL DIMENSIONS: 6 in. wide, 3½ in. high, 2⅞ in. deep.
WEIGHT: 24 oz.

At last, examples of this unique, simple to operate automatic camera are reaching stores. Drop the film cartridge into the supply chamber, close the camera back and the film automatically threads itself to the takeup spool and winds to the first exposure. Our field tests indicate that you can cause the camera to misload but you have to do so deliberately. Power for the film wind, shutter and light-emitting diodes in the finder are supplied by four AA-cell alkaline energizers in the comfortable and much appreciated removable battery compartment/handgrip. Over 60 rolls of 36 exposures can be handled by one set of fresh batteries.

Diodes in finder light to indicate aperture selected by super-fast-acting center-weighted metering circuit for any shutter speed you set. Diodes indicate over/under exposure warning by blinking, manual control, complete flash recycling with special X-24 unit which shows flash aperture selected. Excellent finder, bright diodes all visible even by eyeglass wearer. Easy to use split-image rangefinder, microprism, full focusing screen. Diode at camera back lights when film is being wound properly by built-in motor drive. Electronic self-timer has blinking white diode with increasing blink rate to warn subject of impending picture taking. Field testers reported excellent percentage of well exposed slides, named FS-1 one of most well thought out cameras in terms of operational convenience; comfortable, smooth electronic shutter release; large, easy-to-turn-at-eye-level shutter speed dial; large numeral frame counter is well placed, metering system reacted almost instantly to even small changes in light levels. We would like to have had shutter-speed scale in finder. While battery compartment of X-24 flash makes it necessary to take unit off camera to rewind film, auto exposure from 2 to 25 ft. at f/5.6 was possible with ASA 400 film. Motor drive which, when tested, could power single shots or bursts to 1 to 3 frames per second had one of lowest noise levels of any motor or winder tested. Full manual exposure provision was much appreciated. This compact, light camera was furnished with a fairly short focal-length lens which proved in resolution to be one of the best tested on any camera regardless of cost.

Although it's more expensive than some automatic SLRs without motors, its built-in auto-wind capability makes the FS-1 one of the simplest high grade SLRs to operate.

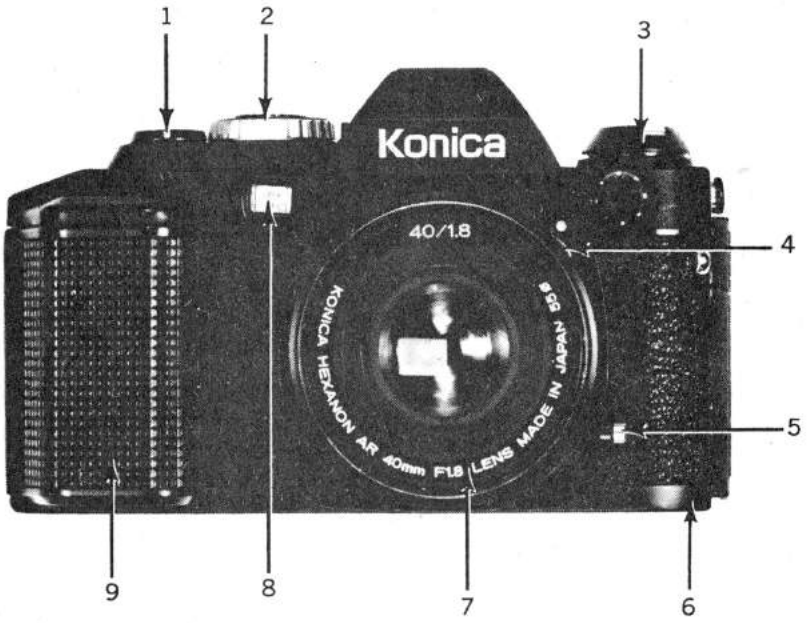

1. LED finder into turn-on switch/magnetic shutter release. **2.** Giant shutter-speed dial. **3.** Rewind knob with folded rewind lever. **4.** Auto exposure/manual aperture lock. **5.** Lens locking button. **6.** Automatic film loading. **7.** Compact short focal-length lens in Konica bayonet lens mount. **8.** Blinking electronic self-timer control/signal. **9.** Motor drive battery compartment/hand grip. **10.** Shutter-release lock. **11.** ASA film speed index-setting window. **12.** Dedicated flash hot shoe. **13.** PC sync terminal. **14.** Provision for electronic remote control connection. **15.** Automatic exposure/manual aperture ring.

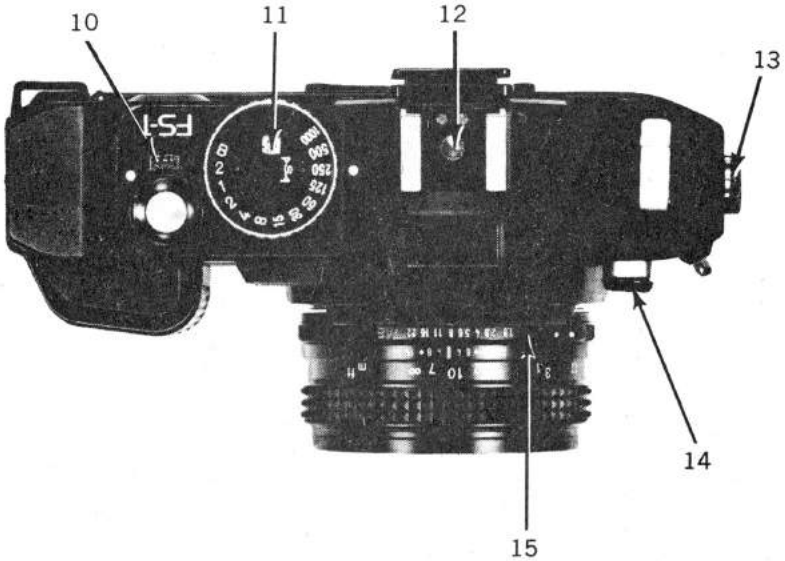

Leica R3

TYPE: 35mm eye-level single-lens reflex camera.
LENS: 50mm f/2 Summicron-R in interchangeable bayonet mount, apertures to f/16, focusing to 20 in.
SHUTTER: CLS (Copal-Leitz System) metal-blade focal plane, electronically timed with speeds from 4 to 1/1000 sec. plus B, mechanically-controlled X-sync speed of 1/90 sec., M sync, self-timer.
VIEWING: Non-interchangeable eye-level prism with central split-image rangefinder microprism collar, full-focusing screen.
OTHER FEATURES: Two 1.5-volt silver-oxide batteries power dual CdS meter circuits with two cells atop prism providing averaging readings, third cell below mirror providing limited area readings of central portion of viewing screen, open-aperture readings or auto-exposure in both meter modes via electronically-controlled shutter, ±two stop auto-exposure compensation, shutter speeds, apertures visible in finder, provision for multiple exposures, film cartridge viewing window, X-sync hot shoe, battery-check light, depth-of-field preview, eyepiece blind, self-timer.
PRICE: R3 with 50mm f/2 Summicron-R lens $1,329.00. R3 MOT, as above, $1,479. Motor Winder for MOT, $447.
MANUFACTURER: Wild-Leitz Ltd., Lisbon, Portugal.
IMPORTER: E. Leitz, Rockleigh, NJ 17647.
PHYSICAL DIMENSIONS: 6¾ in. wide, 3¾ in. high, 3¾ in. deep.
WEIGHT: 2 lb. 6 oz.

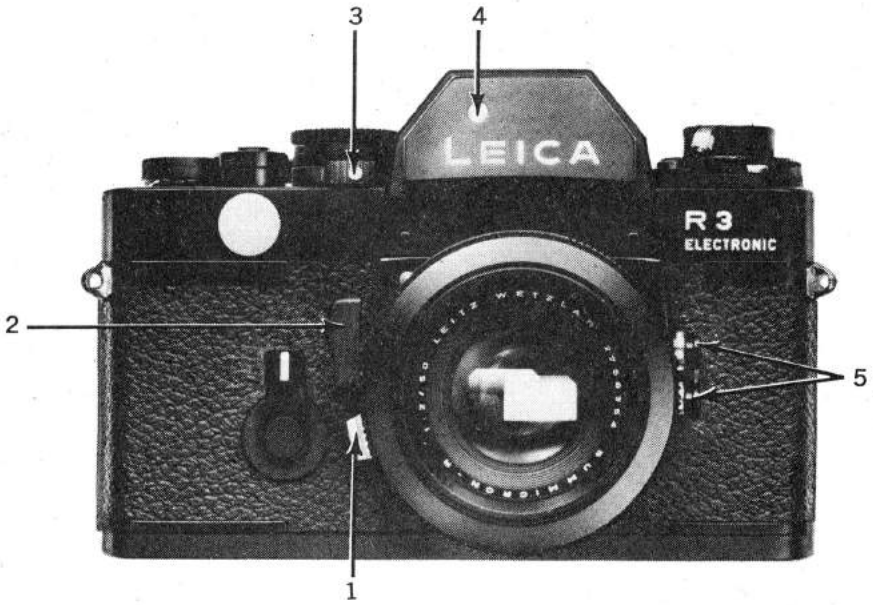

1. Lens-release lock. **2.** Preview lever. **3.** Spot/center-weighted meter mode switch. **4.** Finder readout illumination window. **5.** Covered PC contacts. **6.** Film speed/exposure-compensation dial. **7.** Multi-exposure control. **8.** X-sync hot shoe. **9.** Eyepiece-blind lever.

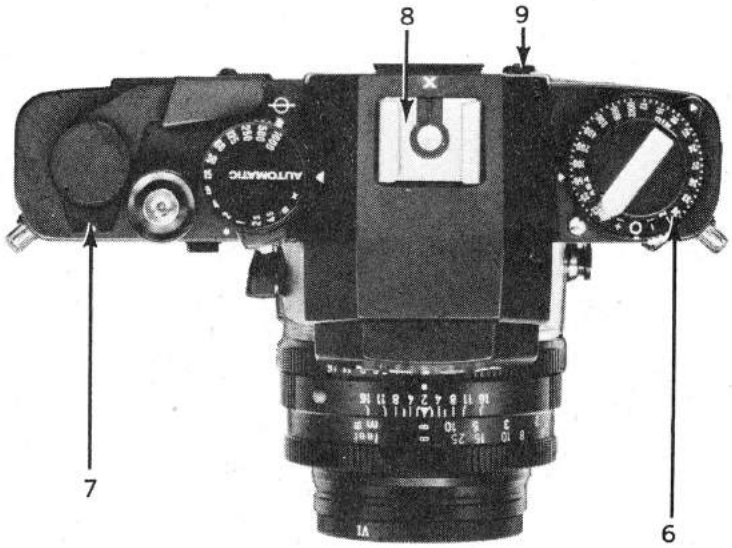

The Leica R3 and its sister camera, the R3 MOT (for motor winder use) are now Leitz's SLR standard bearers. Differing only in their motor winder compatibility (shaft keyways and electrical connections on the bottom of the MOT), the twin Rs are competent and sophisticated performers. The R3 has the solid, high-quality feel that Leitz is known for, excellent optics, high viewing screen brightness and contrast, and an unusually selective and controllable automatic metering system. The motor winder is very quiet.

The R3's metering system incorporates a Leicaflex-style, selective-area metering option in addition to the center-weighted metering pattern derived from the XE-7. This semi-spot dual metering system employs a unqiue electronic memory hold which lets you hold a reading in the spot-metering mode for up to 30 sec. (and well beyond) by pressing the shutter button partway down. Leitz's hefty three-claw bayonet, a superbly machined, heavily plated brass mount held in place with six screws, graces the front of the camera.

To set this aperture-preferred camera for auto exposures, you turn the knurled shutter-speed dial until the word "Automatic" appears opposite the shutter-speed index on the side of the prism housing.

If you now move the Leica's meter-mode selector switch to the right, uncovering a white rectangle, you'll get center-weighted averaging metering. Move it to the left and you'll see a white dot which indicates you're set for limited area (spot) metering.

When you bring the R3 up to eye level you're greeted by a nice, bright, viewing image with a fine, barely discernible Fresnel pattern. In the center of the finder is a horizontally divided, split-image rangefinder surrounded by a relatively large, fine-patterned microprism collar. Along the right-hand edge of the finder is a complete scale of timed shutter speeds (4-1/1000 sec.). When the meter's on, a long black needle points to the camera-selected shutter-speed that's automatically set according to the center-weighted meter reading. Atop the center of the viewing image are two additional windows. The aperture window displays white-on-black digits and the shutter-speed window displays all manual shutter speeds in white and a big orange "A" when set for auto.

The Leica R3, despite its "international" origin (Japanese, Portuguese, German and Canadian), is manufactured to Leitz's uncompromising standards—as its excellent balance, feel and finder brightness will certainly attest.

Mamiya NC1000

TYPE: 35mm single-lens reflex.
LENS: 50mm f/1.4 or f/1.7 Mamiya-Sekor in interchangeable bayonet mount, apertures to f/16, focusing to 1½ ft.
SHUTTER: Electronically-controlled cloth focal plane with speeds of 1-1/1000 sec. plus B, FP, X sync.
VIEWING: Fixed eye-level prism with central split-image rangefinder, microprism collar, full-focusing screen.
OTHER FEATURES: Two 1.5-volt silver oxide batteries power CdS meter for center-weighted readings of focusing screen at full aperture, for shutter-priority auto exposure (you set the shutter speed, camera chooses aperture), f/stops visible in finder, self-timer, depth-of-field preview button, battery check, X sync hot shoe.
PRICE: $449.95 with 50mm f/1.4 lens, $399.95 with 50mm f/1.7.
MANUFACTURER: Mamiya Camera Co., Ltd., Tokyo, Japan.
IMPORTER: Bell & Howell/Mamiya Co., Chicago, IL 60645.
PHYSICAL DIMENSIONS: with f/1.7 lens: 5⅜ in. wide, 3¼ in. deep, 3¼ in. high.
WEIGHT: 1 lb. 7½ oz.

In supplying the current demand for compact SLRs offering full exposure automation, Mamiya has given us a solid, basic, no-frills camera with the accent on ease of use and dependability. Just set the ASA (25-3200) and shutter-speed dials, placed concentrically around the rear of the lens, and pull the wind lever out to operating position, and the NC 1000 automatically provides the camera-selected aperture which is read out by a needle along the left-hand side of the finder. To lock in an exposure reading (when taking close-up readings, for example) you press the shutter-release button partway down. As long as you keep the button partially depressed, the internal aperture-stop-down controls will lock in the aperture indicated in the finder. To turn off the meter, you press in on a large black button atop the wind-lever pivot, and the lever moves flush with the camera back.

The NC 1000's large, three-lobed bayonet mount resembles the one on the discontinued Mamiya Auto X1000 or Auto XTL, but they are not compatible. However, the NC 1000 has its own lens line which presently includes a 14mm f/3.5 fisheye, 21mm f/2.8, 28mm f/2.8, 35mm f/2.8, 135mm f/2.8, 200mm f/3.5, 300mm f/4, 50mm f/3.5 macro and three new zooms—a 45-90mm f/3.5, 50-135mm f/3.8, and an 80-200mm f/3.8.

Mamiya's latest SLR can also be described as an "all-electronic" camera since electronic circuits not only control the metering system, but time the shutter speeds as well. Unlike other electronic cameras, the NC 1000 incorporates no mechanically-timed manual speeds, but the self-timer is mechanical. The condition of the two all-important batteries is easily checked by pressing a button on the back.

As you might expect from its dimensions, the NC 1000 is very handy. All controls work smoothly and the finder image is reasonably bright and quite contrasty. We also liked the 45° angled split-image rangefinder (which works with a wider variety of subjects than the conventional horizontally-split type), but we were less enthusiastic about the hard-to-set ASA ring and high-pressure preview button. All in all, the camera offers an appealing alternative in the increasingly popular shutter-priority compact SLR category.

Incidentally, a slightly more deluxe version of the NC 1000, the NC 1000s, is sold only through B&H/Mamiya Co. Photographic Specialist dealers. Its general features are identical to the NC 1000, but it sells for $30 more comparably equipped and has a few additional features. These include a range of four interchangeable viewing screens, a film box end clip on the back, and a shutter release lock on top.

Our test of the NC 1000 (see "Modern Tests," Feb. 1978, page 126) indicates that it's a very pleasant, competent machine and the "S" adds icing to a very nice cake. Photographers in search of a shutter-preferred automatic should examine both.

1. Self-timer release. **2.** Preview button. **3.** ASA-ring release catch. **4.** Battery-check light. **5.** EE-aperture lock. **6.** ASA-setting ring. **7.** Shutter-speed ring tab. **8.** Meter-off button. **9.** Hot-shoe cover. **10.** Battery-check button.

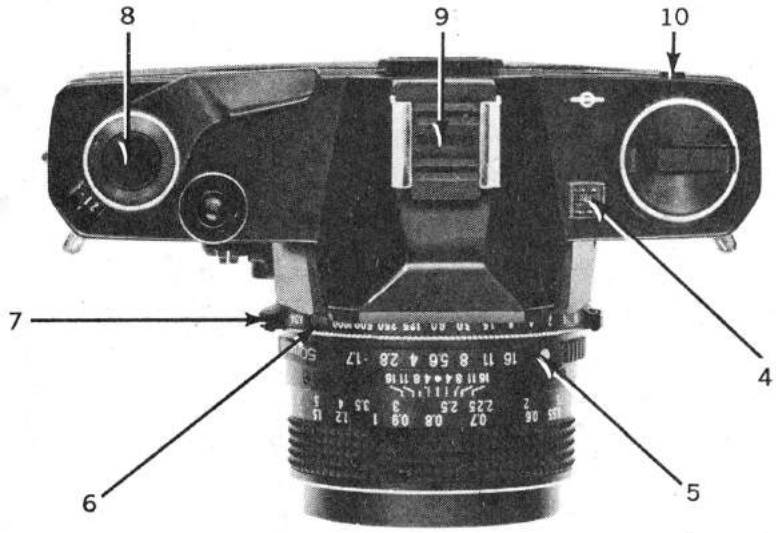

Minolta XD-11

TYPE: 35mm eye-level single-lens reflex.
LENS: 50mm f/1.4 MD Rokkor-X in interchangeable bayonet mount, stops to f/16, focusing to 20 in.
SHUTTER: Modified Seiko MFC metal-blade focal plane, electronically timed, with speeds from 1 to 1/1000 sec. plus B, X sync., self-timer.
VIEWING: Non-interchangeable eye-level pentaprism with central split-image rangefinder, microprism collar, full-area fine-focusing screen.
OTHER FEATURES: Two 1.5-volt silver oxide batteries power single silicon cell circuit measuring center-weighted area of focusing screen at full or shooting aperture for both shutter-speed priority (you set shutter speed, camera sets aperture) and aperture priority (you set aperture, camera sets shutter speed) auto exposure, auto-exposure-compensation dial, full manual control; shifting aperture and shutter-speed scales in viewfinder with LEDs indicating apertures and speeds set by camera, single numerals show user-set apertures and speeds; over, underexposure warning signals in finder, pulsating flash-ready diode, automatic shutter-speed shifting for over-under exposure in shutter-speed-priority mode, electromagnetic shutter release, provision for ordinary and magnetic cable releases, film box memo holder, provision for multiple exposure, built-in eyepiece blind, film winding signal, provision for 2-fps motor winder and auto flash coupled to camera exposure control and winder, self-timer, hot shoe sync flash, depth-of-field preview.
PRICE: $724 with 50mm f/1.4 MD Rokkor.
MANUFACTURER: Minolta Camera Co., Ltd., Osaka, Japan.
IMPORTER: Minolta Corp., 101 Williams Drive, Ramsey, NJ 07446.
PHYSICAL DIMENSIONS: 5⅜ in. wide, 3⅜ in. high, 3½ in. deep.
WEIGHT: 1 lb. 14 oz.

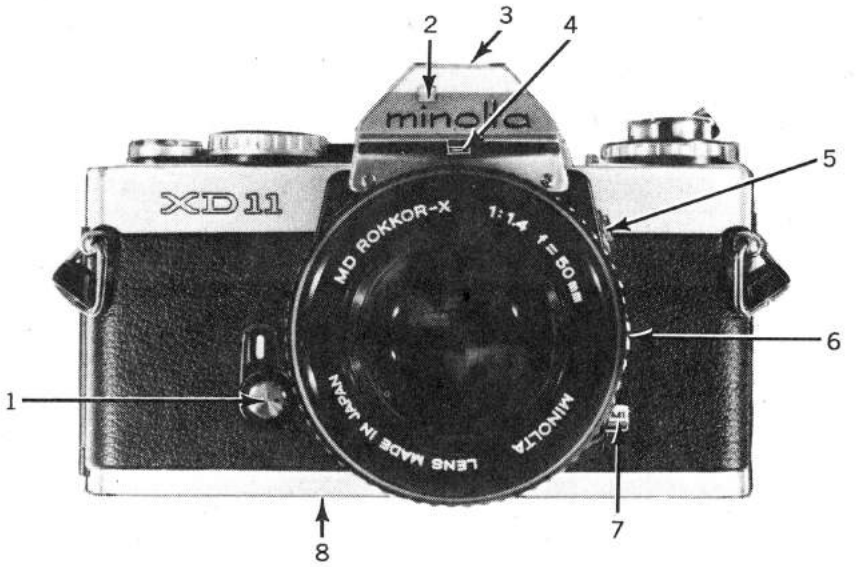

1. Self-timer with 10-sec. delay. **2.** Shutter-speed scale illuminating panel. **3.** Coupled autoflash hot shoe accepting fully coupled Minolta Auto Electroflash 200X. **4.** Aperture scale reflecting window. **5.** Lens release button. **6.** X-sync flash terminal. **7.** Depth-of-field preview button. **8.** Provision for accessory Auto Winder D for up to 2 fps. **9.** Shutter-speed dial for speeds from 1 to 1/1000 sec. plus B. **10.** Electromagnetic shutter-release button with electronic remote cable coupling. **11.** Dual automation and manual switch. **12.** Eyepiece-blind lever. **13.** ASA-index release button. **14.** ASA-index window. **15.** Auto-exposure compensation scale. **16.** MD Rokkor-X dynamically balanced aperture leaf lens.

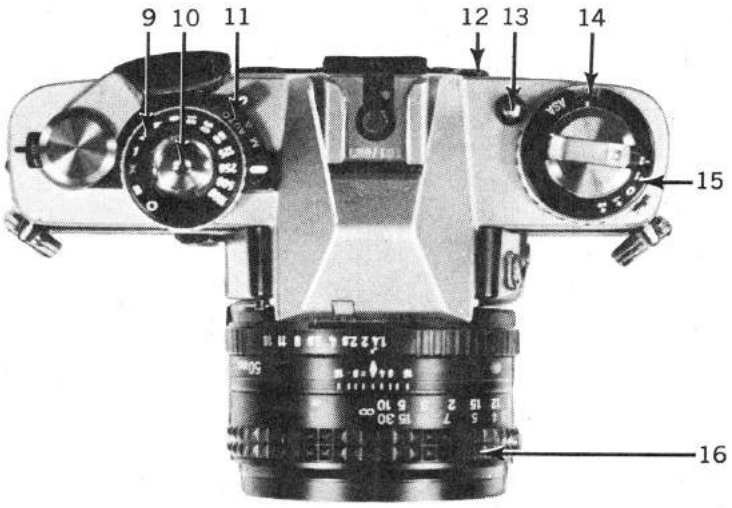

While the XD-11 no longer has the distinction of being the world's only SLR offering both shutter-speed and aperture-priority automation—a title it acquired on its introduction in 1977—it's proven to be a durable performer.

If you set the mode selector switch for shutter-speed priority, an aperture scale appears to the right within the view finder. Adjacent red light-emitting diodes next to the aperture numerals indicate the lens opening selected by the camera meter circuit for whatever shutter speed you select. The shutter speed itself also appears—at the bottom of the finder. If perchance you should find that there is not enough or too much light for proper exposure at the shutter speed selected, the camera will automatically shift the shutter speed the necessary amount to reach proper exposure. The need for this can be seen within the finder: Either top or bottom over or underexposure warning arrows will light.

Switch the mode selector to aperture-preferred automation and the aperture scale within the finder is changed to a shutter-speed scale. Now, for any aperture you set, the camera's metering system will select the proper shutter speed and a red diode will light next to that numeral. The camera can also be switched to manual operation, in which case you can set both the shutter speed and aperture yourself, and see the setting within the finder while the shutter speed scale indicates suggested proper exposure.

The new acute-matte focusing screen provides about 1 f/stop more illumination than former screens, the image magnification has been improved, the split-image rangefinder is very good as is the microprism collar. We particularly liked the smooth electromagnetic shutter release and the overly large controls with their highly legible numerals. Would-be purchasers should be cautioned that only the new MD Minolta lenses will provide shutter-speed automation.

The XD-11 can be fitted with a coupled autoflash unit with two auto ranges and two manual. It can sync on manual with the 2-fps accessory auto winder.

Minolta XG-9

TYPE: 35mm eye-level single-lens reflex.
LENS: 45mm f/2 MD Rokkor-X in interchangeable bayonet mount, stops to f/16, focusing to 2 ft.
SHUTTER: Electronically-timed rubberized cloth focal plane shutter, speeds from 1 to 1/1000 sec. plus B, X sync, electronic self-timer.
VIEWING: Non-interchangeable eye-level pentaprism with fixed central split-image rangefinder, microprism collar, acute matte focusing screen.
OTHER FEATURES: Two 1.5-volt silver-oxide batteries power CDS circuit with cells on either side of eyepiece reading a center-weighted area of the focusing screen at full aperture for automatic exposure (aperture-preferred—you set the aperture, camera sets shutter speed), manual shutter speeds, LEDs in finder indicate shutter speed set on scale for auto exposure, under or overexposure warning arrows, overexposure locks shutter release, electromagnetic shutter release and meter switch, LED battery check, film advance indicator window, film box reminder slot, hot shoe sync with provision for auto-coupling flash unit, flash-ready signal in finder, provision for standard or electronic remote release, provision for Auto Winder G, viewfinder blind, and neckstrap battery carrier furnished.
PRICE: $433 with 45mm f/2 MD Rokkor-X lens, $463 with 50mm f/1.7 MD Rokkor-X lens, both with chrome body.
MANUFACTURER: Minolta Camera Co., Ltd., Osaka, Japan.
IMPORTER: Minolta Corp., 101 Williams Drive, Ramsey, NJ 07446.
PHYSICAL DIMENSIONS: 5⅛ in. wide, 3⅜ in. high, 3 in. deep.
WEIGHT: 1 lb. 9 oz.

Minolta's pulled a pretty neat trick with their new XG-9. Not only have they added new features to those of the XG-7 (now discontinued) but the list price is $20 lower.

Added to the features of the XG-7 are the improved brilliance of the acute matte focusing screen formerly restricted to the XD-11, a depth-of-field preview button to the left of the lens mount, a detachable back for accessory Data Back G, and in-finder imaging of lens apertures directly from the lens itself. A newly-introduced 45mm f/2 compact normal lens lowers price and bulk still further.

Many features are common to the XG-7: aperture-preferred automation, electronic/mechanical shutter release switch and remote control socket, use of center-weighted CdS cells, rubberized cloth, electronically-timed focal plane shutter, LED finder indications and shutter lock, film advance indicator window, hot shoe coupling for dedicated Minolta X-series flash units (there are now four available), and compact, lightweight plastic-sheathed body. The same motor, Auto Winder G by name, caters to the new model. Unchanged are general weight, handling and "feel," compact size, and good human engineering. The camera feels right and all controls appear, as if by magic (or good design) under the relevant fingertip. In manual mode, either aperture or shutter speed can be set with the finder indicators but the meter is still inoperative. You'll have to take readings in the automatic mode and then reset—or modify exposures automatically with the ±2 stop exposure compensation dial. The camera, like many other electronic automatics, is inoperative with a dead battery but the large combination battery check and self-timer LED makes for convenient battery testing. Carry an extra set of batteries in the strap holder provided to be safe.

Like the more sophisticated dual-mode XD-11, the XG-9 is a neat, compact, and well-designed SLR with easily readable finder readouts and good-sized controls and switches.

Standing on its own, the XG-9 brings full-featured aperture-preferred automation to the buyer at a surprisingly modest cost. Its aperture-preferred system functions with any Minolta lens from MD to preset—and oddball optics can be used as well.

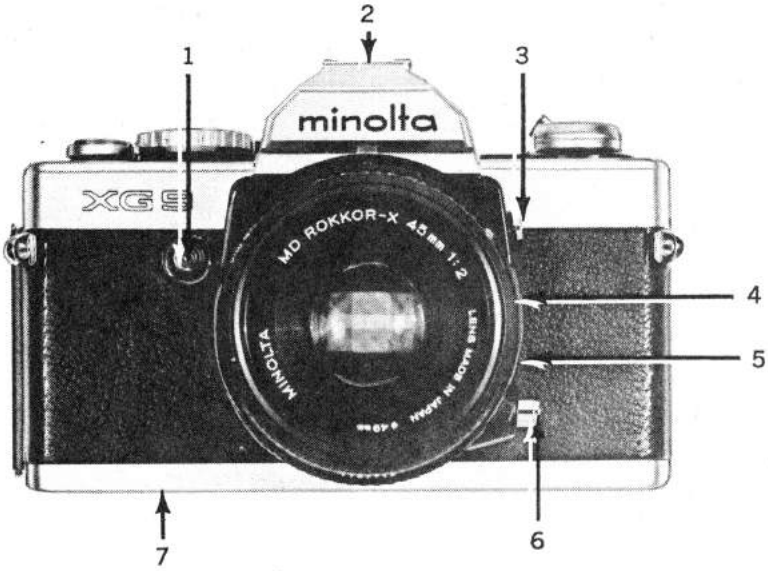

1. Dual purpose flashing LED indicator for battery test and self-timer operation. **2.** Coupled hot shoe for dedicated and standard hot-shoe-equipped electronic flash. **3.** Lens-release button for bayonet mount. **4.** Dual-purpose screw terminal for mechanical or electronic remote releases. **5.** Sync terminal for electronic flash. **6.** Depth-of-field preview button. **7.** Mechanical and electronic coupling on camera bottom for accessory auto winder. **8.** Film load indicator and advance verification window. **9.** Auto-resetting frame counter. **10.** Coaxially mounted shutter-speed setting dial, meter switch and shutter release. **11.** ASA-index setting window and indicator. **12.** Auto-exposure compensation selector and scale. **13.** On/off battery check and self-timer switch. **14.** Release button for automatic use or manual speed selection.

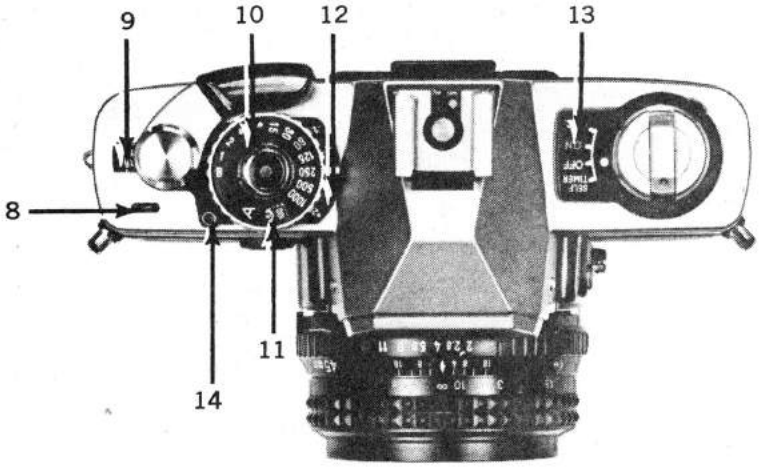

Nikon FE

TYPE: 35mm eye-level single-lens reflex camera.
LENS: 50mm f/1.8 Nikkor in interchangeable bayonet mount, apertures to f/22, focusing to 18 in.
SHUTTER: Electronically-timed Copal Square metal blade focal plane with speeds from 8 sec. to 1/1000 sec. plus B, MX sync, self-timer.
VIEWING: Non-interchangeable eye-level prism with central split-image rangefinder, microprism collar, full-area focusing screen.
OTHER FEATURES: Two 1.5-volt silver-oxide battery-powered silicon photo diode circuit with diodes on either side of the eyepiece reads center-weighted area of focusing screen at full aperture for aperture-preferred auto exposure, manual match-needle override, auto-exposure compensation, memory-hold lever, depth-of-field preview lever, shutter-release lock, film-box-end reminder slot, shutter speeds, apertures and over and underexposure warning signals in finder, battery check light, multiple exposure provision, accepts motor, coupled autoflash.
PRICE: $683.50 with 50mm f/2, $706.50 with 50mm f/1.8, $812 with 50mm f/1.4, $933.50 with 50mm f/1.2.
MANUFACTURER: Nippon Kogaku K.K., Tokyo, Japan.
IMPORTER: Nikon Inc., Garden City, NY 11533.
PHYSICAL DIMENSIONS: 5½ in. wide, 3½ in. high, 3⅝ in. deep.
WEIGHT: 1 lb. 13 oz.

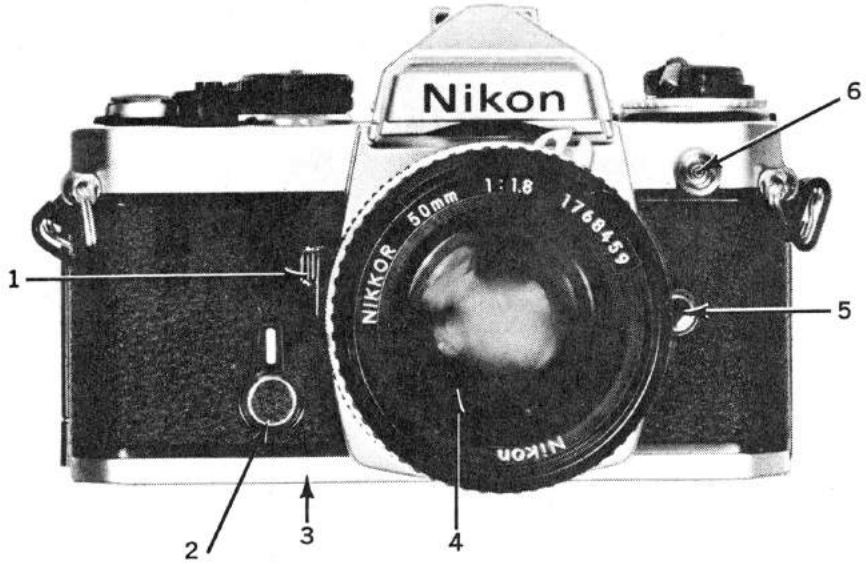

1. Depth-of-field preview lever. **2.** Combined auto-exposure memory hold lever/cancellable self-timer. **3.** Provision for accessory motor drive. **4.** AI Nikkor bayonet lens mount. **5.** Lens-release button. **6.** MX sync PC flash terminal. **7.** Multiple-exposure control lever. **8.** Locking shutter release. **9.** Manual shutter speed dial. **10.** Hot shoe with provision for flash unit to set sync shutter speed, show ready-light in finder. **11.** ±2 EV auto-exposure compensation dial. **12.** ASA dial with indices 12 to 4000.

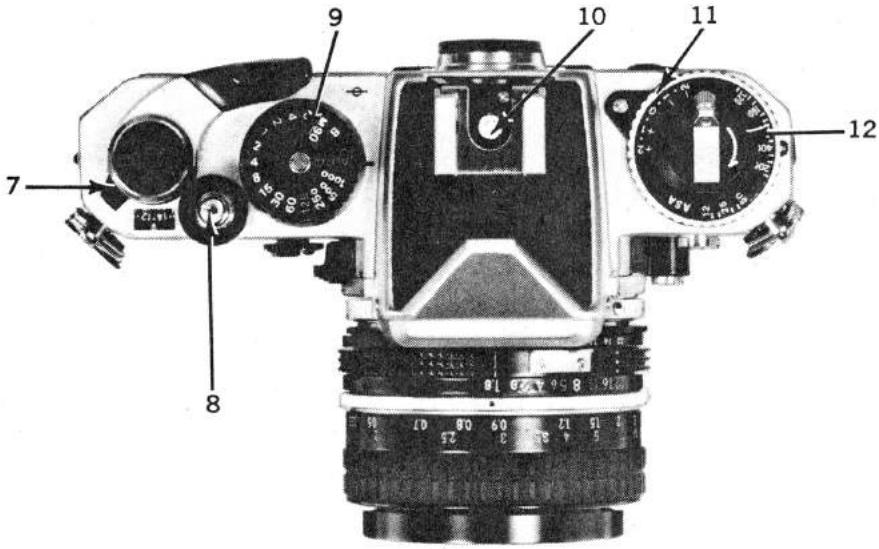

While Nikon recently introduced a smaller, lighter auto SLR with less features, the Nikon EM, the FE remains the major Nikon camera that serious photographers seeking the convenience of full automation will find most attractive. For 1980, Nikon has a new motor drive for the FE (and the FM), the MD-12 which replaces the MD-11. It differs from the older model in being activated immediately when its built-in shutter release button is pressed rather than having a traditional on-off switch. A new remote release is also available.

Among the Nikon FE's unique features is the availability of a fully-coupled SB-10 electronic flash unit which not only sets the shutter speed of the camera automatically to the proper 1/90 sync setting but also furnishes a constant light in the viewfinder to indicate full recycling.

The meter circuit turns on in traditional Nikon-Nikkormat manner by pulling the rapid wind lever slightly from the body. Looking through the viewfinder, you will see a vertical shutter-speed scale to the left marked from 8 sec. to 1/1000 sec., and the aperture set reflected from the lens barrel itself into a window above the viewing screen. Centrally, there is a very good split-image rangefinder, somewhat narrow microprism collar and a full-area outer focusing screen. When the shutter-speed dial is shifted to manual operation, a green transparent pointer indicates the shutter speed set while the black needle continues to suggest the proper exposure meter reading. The silicon cell meter circuit is extremely fast, and accurate in low light.

We were pleased with the simple multiple-exposure control near the rapid-wind lever hub, the easy-to-use battery check lever and light, and the existence of two manual mechanical shutter speeds, 1/90 sec. and bulb, which can be used if power fails.

Screens can be changed quickly from within the mirror chamber (no, they are not interchangeable with the Nikon F2 screens). The camera comes with what is generally known as a Type K screen. Also available are Type B with a matte 12mm circle and Type E screen which adds vertical and horizontal grid lines.

The accessory SB-10 flash unit, powered by four AA cells with two distance ranges, 2 to 10 and 2 to 20 ft., fits the FE only. The MD-12 Motor Drive requires eight AA cells. This seems like a great many, but they do power the motor for continuous sequences up to 3.5 frames per sec., far faster than most winders. It's a rugged, convenient-to-use camera, with Nikon quality.

Olympus OM-2N

TYPE: 35mm eye-level single-lens reflex camera.
LENS: 50mm f/1.8, f/1.4 or 55mm f/1.2 Zuiko in interchangeable bayonet mount, stops to f/16, focusing to 18 in.
SHUTTER: Electronically-controlled cloth focal plane with speeds from 120 sec. to 1/1000 sec. (manual speeds from 1 sec.) plus B, FP and X sync.
VIEWING: Fixed eye-level prism, interchangeable screen with microprism/split-image-matte, full-focusing screen.
OTHER FEATURES: Silicon-blue cells within mirror box chamber average light from specially treated first shutter curtain surface and/or full average area of film surface itself for full automatic (you set the aperture, the camera sets the shutter speed) exposure, match-needle manual control exposure with CdS cells on either side of viewfinder eyepiece measure average light from the viewing screen and also serve as shutter-speed indicator in automatic operation, auto-exposure compensation, LED in finder indicates flash-ready and sufficient expsoure with T-20 auto-flash, battery check light, removable hot shoe, removable hinged back, provision for motor drive, film-box-reminder clip.
PRICE: $801 with 55mm f/1.2, $672 with 50mm f/1.4, $608 with 50mm f/1.8 lens. $27 additional for black body.
MANUFACTURER: Olympus Optical Co., Ltd., Tokyo, Japan.
IMPORTER: Olympus Corp., Woodbury, NY 11797.
PHYSICAL DIMENSIONS: 5 3/16 in. wide, 3 in. high, 3 3/16 in. deep.
WEIGHT: 1 lb. 8½ oz. with 50mm f/1.8.

While Olympus has been adding subtle refinements to the OM-2 from time to time without fanfare, the OM-2N breaks with tradition. A full-average metering pattern is now obtained whether the camera is reading off the first curtain or the film itself due to a new first-curtain pattern. The CdS cells for match-needle operation and speed indication are still center-weighted.

New with the OM-2N are a number of mechanical and electronic improvements: internal flash-ready/sufficient light indication in the finder, internal contact for a forthcoming data back, extended exposure sensitivity to -6.5 EV (120 sec. maximum guaranteed, not 60 as before) and a brighter yet less current-consuming battery-check LED. Major changes involve a revamped hot-shoe system allowing the camera to set itself to 1/60 sec. with X sync when any flash unit is inserted in the hot shoe. Only the new, smaller T-20 can be used for off-the-film flash automation as the larger, more powerful Quick-Auto flash 310 cannot be used with the Shoe 4 supplied with the camera. Other changes include a re-shaped wind lever and rewind release, pressure plate and cassette stabilizing springs and, most importantly, in-finder indication when exposure compensations have been dialed into the system.

After three years in production, the OM-2 is still the only camera providing both continuous light and automatic flash exposure in the film plane. The system is still unmatched in low-light performance and versatility. It can actually modify exposures if light conditions change during longer exposures. In terms of exposure accuracy, the camera stayed within ½ f/stop of absolute accuracy over almost the whole exposure range, which extends from slightly of 1/1000 sec. to 2 min.

The finder image magnification and brightness remains the same for all OMs, as does the changing shutter speed scale and match-needle index. In the "off" position no scale is visible at all, serving as a reminder. Even if you shoot with the camera "off," it will still deliver the correct exposure if there's enough light for 1/30 sec.

The battery-check system is distinctly superior, offering brighter yet less battery draining red diode. If the camera should hand up during an exposure or because of a weak or dead battery, a new setting on the selector will return things to normal.

This is the compact 35mm SLR against which others are measured.

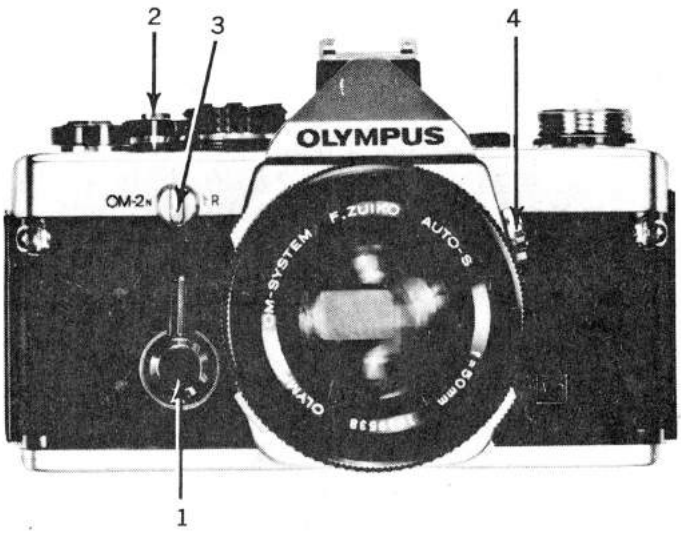

1. Mechanical self-timer, 4 to 12-sec. delay. **2.** Shutter release tapped for cable release. **3.** Rewind switch. **4.** PC sync terminal and M/X sync selector switch. **5.** Ratcheted 130° stroke wind lever. **6.** ASA index scale (12 to 1600 ASA). **7.** Exposure compensation dial (plus or minus 2 stops). **8.** Hot shoe 4, underthreaded connection for interchangeable hot shoes. **9.** Meter mode selector switch for off/automatic/manual/battery check and camera reset. **10.** Shutter-speed setting ring for manual use. **11.** Lens bayonet-release button (on each lens mount).

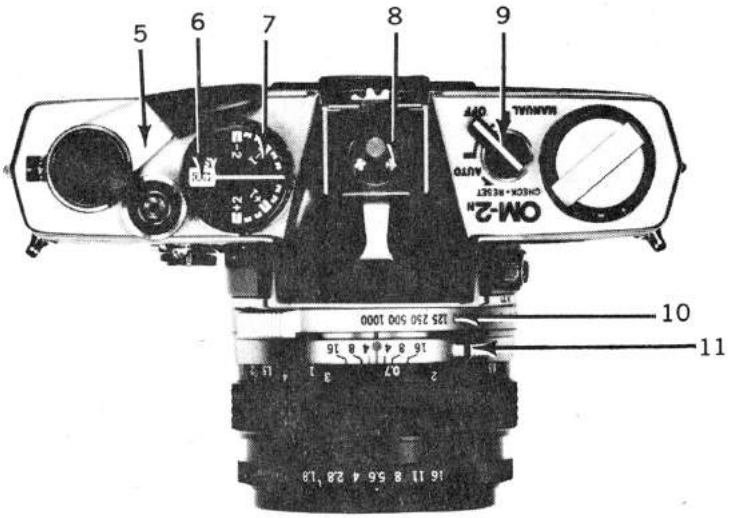

Ricoh XR-2S

TYPE: 35mm eye-level single-lens reflex.
LENS: 50mm f/1.4, f/1.7 or f/2 XR Rikenon in Pentax K bayonet mount, stops to f/16, focusing to 18 in.
SHUTTER: Copal CCS-E electronically-controlled metal-blade focal plane with auto-exposure speeds from 8 to 1/1000 sec. (manual from 4 sec.), plus B, X sync., self-timer.
VIEWING: Non-interchangeable eye-level prism with diagonal split-image rangefinder, microprism collar, full-focusing screen.
OTHER FEATURES: Silver-oxide battery-powered CdS circuit with three cells measures center-weighted area of focusing screen at full aperture for auto exposure (aperture preferred), depth-of-field preview button, shutter speeds and apertures visible in the finder, auto-exposure compensation, battery check, provision for double exposures dedicated hot-shoe sync, with flash ready signal in finder, motor winder provision, self-timer.
PRICE: $499.95 with 50mm f/1.4 XR Rikenon, $469.95 with 50mm f/1.7 XR Rikenon, $444.95 with 50mm f/2 XR Rikenon.
MANUFACTURER: Ricoh Co. Ltd., Tokyo.
IMPORTER: Braun North America (Div. of The Gillette Co.), Cambridge, MA 02142.
PHYSICAL DIMENSIONS: 5½ in. wide, 3 9/16 in. high, 3½ in. deep.
WEIGHT: 28 oz.

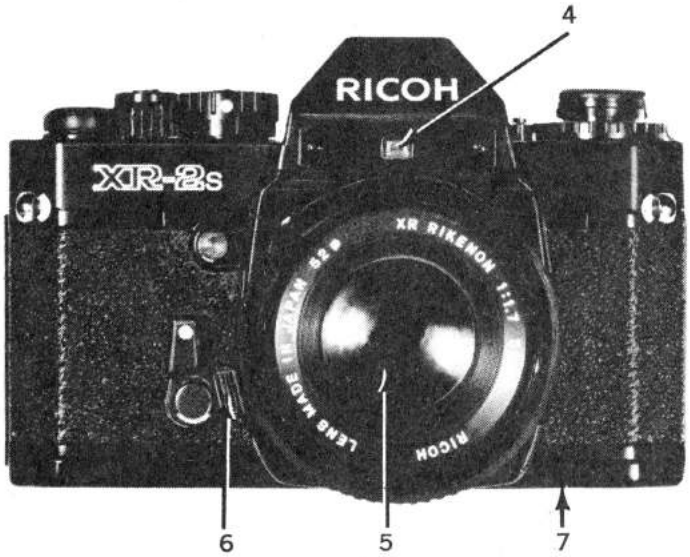

1. Depth-of-field preview button. **2.** Combined shutter release/meter turn-on swtich. **3.** Auto-exposure release-lock button. **4.** Prism reflects apertures into finder. **5.** Pentax K-mount bayonet Ricoh lens. **6.** Lens mount release lever. **7.** Provision for auto winder. **8.** Button for multi-exposures. **9.** Wind lever. **10.** Eye-piece-blind actuating lever. **11.** Hot shoe for dedicated flash. **12.** ASA index lock. **13.** ±2 f/stop auto-exposure compensation dial. **14.** ASA film-speed dial. **15.** Battery-check collar.

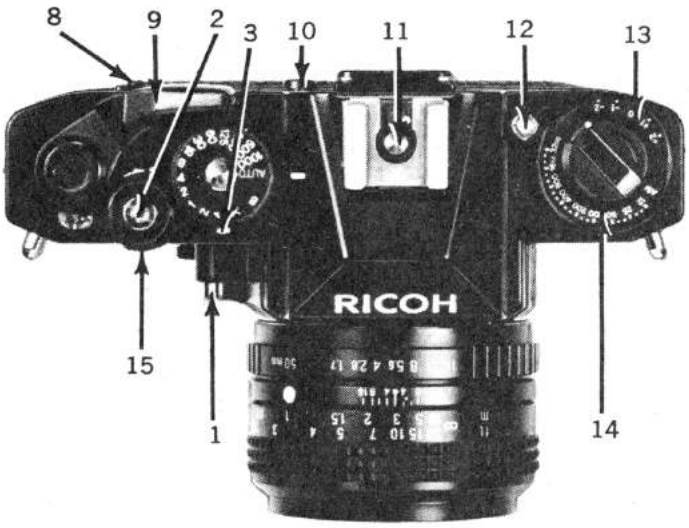

"What a nice little auto exposure camera," we said when we tested the original XR. "Too bad it doesn't have a fully coupled flash unit or provision for a motor winder." Somebody must have been listening, because these two features are exactly the ones that differentiate the XR-2S (available early in 1980) from its predecessor. The other remarks previously made about the XR2 of course still apply to the 2S.

By pressing the shutter release slightly, you turn on the meter circuit. A highly visible black needle at the right hand side of the viewfinder screen travels upwards to indicate the shutter speed the camera will set for any aperture you select on the smoothly operating, excellently finished Pentax-made lens. (The XR-2 has adopted the same Pentax bayonet mount as used in Pentax cameras, thus opening up to the XR-2 user a vast choice of optics.) Although CdS cells are used rather than the more modern silicon or gallium cells, response is extremely fast, due to the use of one CdS cell for high light levels and three in low light levels—a system used in no other camera. Besides incorporating a ±2 f/stop auto-exposure-compensation control, the Ricoh XR-2 can be used for full manual match-needle-exposure operation. When you press the shutter dial lock release button and turn to the manual speeds a green transparent pointer moves over the shutter-speed scale to indicate the actual speed you set, while the black needle continues to point to the recommended speed.

The aperture of the lens is reflected from the lens barrel into the finder at the top of the screen. The diagonal split-image rangefinder works well, although we would have liked a crisper microprism focusing collar. Eyeglass wearers should be able to see the whole screen and the scales. The camera can be operated nicely and all controls set without the need for removing the camera from your eye. A check of the meter coupling range indicated exposures could be made with ASA 400 film down to ½ sec. at full aperture. While some inconveniences were experienced, with various controls having to be operated while holding down various buttons, we found these difficulties minor and were delighted with such features as provision for multiple exposures, built-in eye-piece blind and an efficient battery check. The XR Winder-1, powered by four AA cells, attaches directly to the bottom of the camera with no need to remove any covers, provides continuous bursts to 2 fps or single shots. The XR Speedlight 240 uses four AA cells, has an energy saving circuit, provides a readylight in the camera finder when fully recycled, has a single autoflash range of 3 to 14 ft. at f/5.6 with ASA 100 film.

Rolleiflex SL35E

TYPE: 35mm eye-level single-lens reflex.
LENS: 50mm f/1.4 or f/1.8 HFT Planar in Rollei bayonet mount, stops to f/16, focusing to 18 in.
SHUTTER: Rollei electronically-controlled metal-blade focal plane with speeds from 16 to 1/1000 sec. plus B, X sync, electronic self-timer.
VIEWING: Non-interchangeable eye-level prism with diagonal split-image rangefinder, microprism spot, full-focusing interchangeable screen.
OTHER FEATURES: 6-volt silver oxide battery powered silicon cell circuit with cells on either side of eyepiece measures center-weighted area of focusing screen at full aperture for auto exposure (aperture-preferred), manual override with blinking match-diode exposure system, depth-of-field preview button, multiple exposure provision, diode battery check, film box reminder slot, auto-exposure compensation, memory lock, shutter speeds and apertures visible in the finder, shutter-release lock, hot shoe.
PRICE: $475 with 50mm f/1.8 Planar. Black body, $25 additional.
MANUFACTURER: Rollei Singapore Private Ltd.
IMPORTER: Rollei of America, Inc., Littleton, CO 80160.
PHYSICAL DIMENSIONS: 5.3 in. wide, 3.4 in. high, 3.5 in. deep.
WEIGHT: 28.4 oz.

Rollei has now discontinued all other 35mm SLRs save this auto-exposure model. A wise decision. This is their best, and an excellent camera. At the heart of the camera is Rollei's 14-bladed metal shutter, unique in concept. It's electronically controlled and features a remarkably broad range of shutter speeds—down to 16 full seconds. Camera operation is also unique. Slight pressure on the huge shutter-release button turns on the meter circuit, revealing bright red diodes at the left within the viewfinder. These indicate the shutter speed set by the center-weighted, fast-acting silicon cell meter circuit. More pressure causes the memory lock to operate, thus locking in the reading. Additional pressure trips the relatively quiet shutter. Besides a ±2 f/stop auto-exposure-compensation control, the metering system can also be used when you move the shutter-speed dial from the A setting to manual electronically-controlled shutter speeds (which are infinitely variable, by the way, and can thus be set between markings). When you press the shutter release you will see one or two diodes constantly lit, showing you the shutter speed you've selected, while one or more other diodes pulsate to indicate the speed setting suggested by the metering system. You can match diodes or not, depending on your needs. The meter coupling range is satisfyingly great: We were able to make exposures all the way down to 16 sec. at f/1.8 with ASA 400 film.

Besides the shutter-speed diode display, the finder also incorporates an adequately bright focusing screen (interchangeable from within the mirror chamber) with the unique Rollei diagonal-bar split-image rangefinder plus a generous outer microprism spot and full-focusing screen. Below the finder area is an uncommonly large window in which the highly magnified and very legible aperture numeral set is reflected from the lens barrel itself.

There are many added features of this Rollei you don't expect to find on a camera of its price class—multiple exposure provision and Zeiss-designed lens, for instance. The electronic self-timer and self-timer diode, which warns the subjects the self-timer is operating, are welcome touches, as is the frame counter, which will not operate unless film is advancing properly.

The lens uses the Rollei bayonet mount. Rollei has a series of lenses for the camera from 28 to 200mm plus zooms. More are on the way. We are hoping the future will see the promised auto-winder and perhaps a fully dedicated electronic flash system. Even without these, however, the SL35E is an outstanding camera quite capable of carrying the Rollei name.

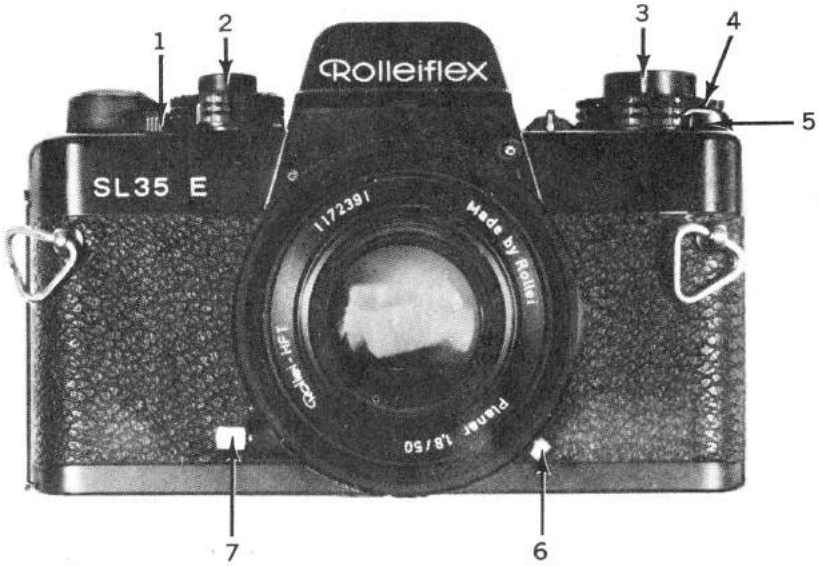

1. Shutter-release lock. **2.** Shutter-release button/meter LED actuating switch/exposure memory-lock hold. **3.** Rewind crank with folded rapid rewind lever. **4.** ±2 f/stop exposure compensation dial. **5.** Exposure compensation dial release-lever. **6.** Lens release button. **7.** Preview and lens stop-down button. **8.** Rapid wind lever. **9.** Exposure counter. **10.** Auto-exposure dial. **11.** Combined rewind/multi-exposure lever. **12.** Hot flash shoe. **13.** Battery check button. **14.** Electronic self-timer. **15.** ASA index-setting window.

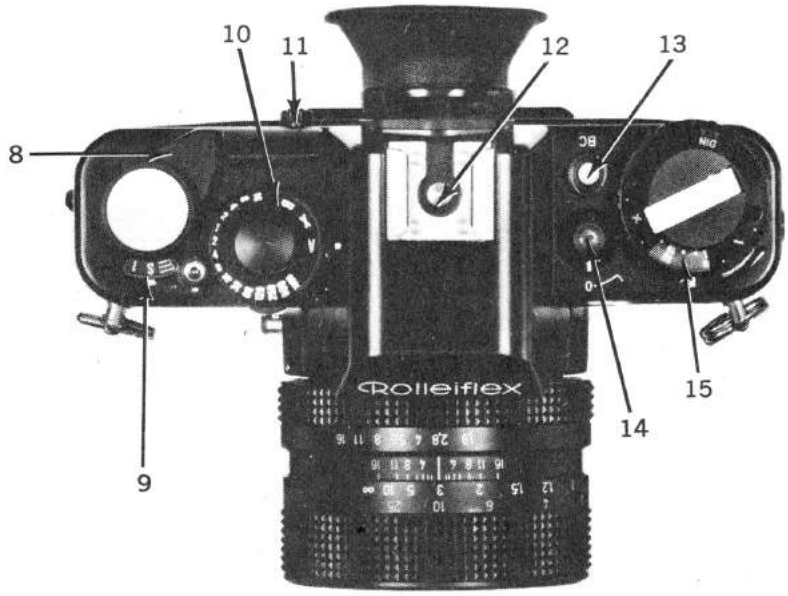

Topcon RE300

TYPE: 35mm eye-level single-lens reflex.
LENS: 55mm f/1.7 RE Topcor in interchangeable Topcon bayonet mount, stops to f/16, focusing to 2 ft.
SHUTTER: Copal Square metal focal plane with speeds from 1 to 1/1000 sec. plus B, X sync, self-timer.
VIEWING: Non-interchangeable eye-level prism with central split-image rangefinder, microprism collar, full-focusing screen.
OTHER FEATURES: CdS cell in prism housing measures center-weighted picture area at full aperture, LEDs indicate correct exposure, meter LEDs visible in finder, provision for auto winder.
PRICE: $415.
MANUFACTURER: Tokyo Optical Co., Ltd., Tokyo, Japan.
IMPORTER: Photo America Corp., Miami, FL 33126.
PHYSICAL DIMENSIONS: 3¼ in. wide, 3⅜ in. high, 5½ in. deep.
WEIGHT: 1 lb., 13 oz.

The RE 300 represents Topcon's first ride on the compact, electronically-controlled, LED-equipped SLR bandwagon. Though we haven't yet been treated to an automatic version, this model is a definite step in the right direction. Combining the latest, most desirable features with Topcon's traditionally dependable mechanics, this black-finished camera with its provision for an auto winder, and its chrome companion RE 200 (no winder), offers basic, meat-and-potatoes, semi-auto, match-diode operation with a few gourmet touches. As a harbinger of a future Topcon, the RE 300 sports such Topcon body firsts as a hot sync shoe (10) and a single sync terminal (2).

Its Topcor lens is smaller and has a new name, but this f/1.7 optic relies on the old familiar, tried-and-true Topcon-Exakta bayonet mount. Releasing it requires a slight inward push on a small, convenient lever (3) located just opposite the sync terminal on the lens' outer rim. Although Topcon has developed a series of five new RE Topcor lenses, you can just as easily use older lenses and/or accessories made for your Super DM (or the classic trapezoidal-shaped Exakta, for that matter, if you're content to lose the auto-diaphragm feature). The shutter release button (4) has been moved from the body front, as on DM models, to the more conventional spot next to the film-advance lever (6).

The shutter-release button (4), though jammed somewhat tightly into close quarters between the speed dial (8) and film-advance lever (6) is easy to get at and fires smoothly, while simultaneously offering enough resistance for the metering system.

A small black bar occupies half the center of the right-hand edge of the finder and contains the trio of LEDs that govern the matched-diode exposure control.

To activate the meter you must press lightly on the shutter release button (4). Although this means the danger of accidentally tripping the shutter is always present, we found that just a minimum of practice was needed to develop the proper soft touch. As you press down, one of the LEDs appears. If it's red you know your exposure is off. There's a + eteched onto the focusing screen at the top end of the LED rectangle and a – at the bottom, indicating which direction to adjust the lens for a correct setting. If the top LED lights, you're in danger of underexposing, so you open up the lens. Naturally, the opposite holds true for the bottom red LED. When you hit the proper aperture, a green LED in the center lights up. There are times when more than one setting will light the green lamp. When that happened, we found it best to stop down until the bottom red LED went on and then open up gingerly to get the green.

There's no camera body coupling cover to remove before threading the Auto Winder-II into the camera's tripod socket. This 13-oz. L-shaped accessory adds a mere 1 in. to the height of the RE 300 while providing an extra hand grip and single-frame shooting at a rate of about 2 frames per sec. You have to lift your finger off the shutter release (4) after each shot.

1. Self-timer with 12-sec. delay time. **2.** Sync terminal for X flash at 1/125 sec. **3.** Release lock for bayonet mount lenses. **4.** Shutter-release button. **5.** Frame counter window. **6.** Plastic-tipped single-stroke film-advance lever. **7.** ASA index scale window for setting film speeds from 25 to 1600. **8.** Shutter-speed dial for 1 to 1/1000 sec. plus B, with outer rim for setting ASA film speeds. **9.** Shutter-speed index mark. **10.** Accessory hot shoe for direct contact flash unit. **11.** Film rewind knob. **12.** Lens aperture setting ring. **13.** Depth-of-field scale. **14.** Footage scale/focusing ring.

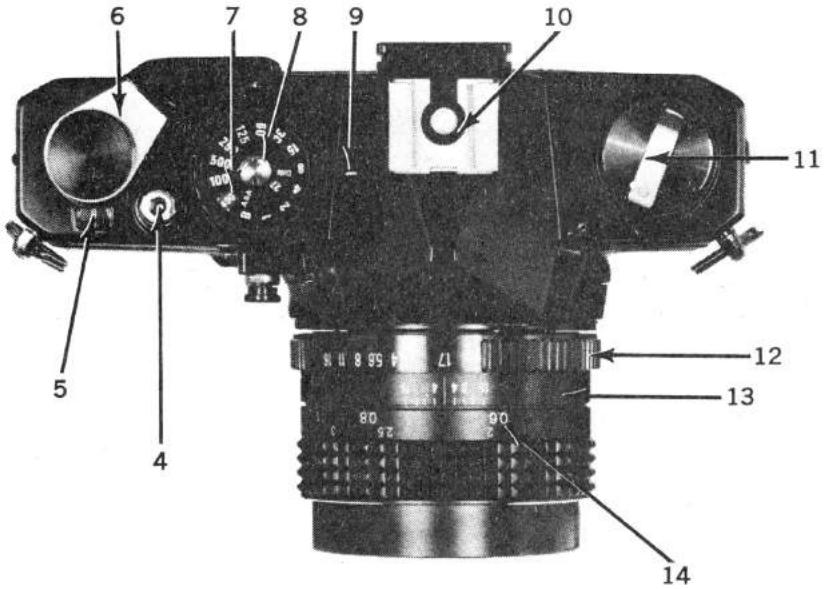

Vivitar XV-3

TYPE: 35mm eye-level single-lens reflex.
LENS: 50mm f/2, f/1.8, f/1.7 VMC or f/1.4 VMC Auto Vivitar in interchangeable Pentax K bayonet mount, stops to f/16, focusing to 20 in.
SHUTTER: Electronically-timed Seiko MFC vertically running metal-blade focal plane with speeds from 8 to 1/1000 sec. plus B, X sync.
VIEWING: Fixed eye-level prism with central split-image rangefinder, microprism collar, full focusing screen.
OTHER FEATURES: Silver-oxide battery powered metering circuit with silicon cells on either side of eyepiece read center-weighted picture area of viewing screen at full aperture, for aperture-preferred automatic exposure (you select aperture camera selects shutter speed); electronic self timer with blinking LED; auto-exposure-compensation dial and memory hold; full manual speed override; shutter-speed scale with LEDs, apertures and over- and underexposure warning LEDs visible in viewfinder. Film box memo holder, hot shoe, shutter release lock, provision for auto winder.
PRICE: $369.95 with 50mm f/2 lens, $384.95 with 50mm f/1.8 lens, $399.95 with 50mm f/1.7 VMC (multicoated) lens; $459.95 with 50mm f/1.4 VMC (multicoated) lens, $399.95 with 40mm f/2.5 VMC (multicoated) lens.
MARKETER: Vivitar Corp., Santa Monica, CA 90406.
PHYSICAL DIMENSIONS: 5¼ in. wide, 3⅜ in. high, 3⅜ in. deep.
WEIGHT: 23 oz.

The Vivitar XV-3, making its debut in this year's top camera guide, ranks among the most compact and more versatile auto exposure cameras available. The adoption of the Pentax K bayonet mount allows a vast number of lenses to be fitted. Slight pressure on the generously large shutter release button turns on the silicon-cell metering system which measures a center-weighted area of the finder screen. Immediately, a red diode lights opposite one of the shutter speeds marked in black on a clear vertical scale at the left of the finder, but within the picture area. The scale runs from 8 sec. to 1/1000 sec. with over and underexposure warning diodes.

The metering circuit remains on for 20 sec. after the release has been touched but then turns itself off thus conserving battery power. Besides an easy to set ±2 f/stop auto-exposure-compensation dial, you can make auto-exposure adjustments using the memory hold. By pushing a small button between the rewind knob and prism housing while pressing the shutter release slightly, you can "hold" any auto-exposure reading while recomposing the picture. Pushing in the button without holding the shutter release, automatically turns off the metering circuit and also cancels the electronic self-timer (should you decide to not use it after setting it). The self-timer has a slow pulsing front red diode which increases in blink rate after 8 sec. to warn you that you have only two more seconds until exposure.

By pressing a well-placed auto-exposure release button, you can move the speed dial to any manual setting from 8 sec. to 1/1000 sec. In the viewfinder, a blinking red diode will indicate the recommended shutter speed setting while a steady red diode will appear opposite the actual shutter speed you've selected.

The view through the finder is bright, the split-image rangefinder and microprism collar of good quality, with a large aperture set window appearing above the finder area. As with most systems of this type, the f/stop on the lens aperture ring is reflected into the finder by means of a small prism on the front of the pentaprism housing. Unlike almost all metal-shutter SLRs, you can wind film using either one single short 135° stroke of the comfortably-shaped, plastic tipped wind lever or use several small strokes. The four-AA-cell Auto Film Winder ($134.95) provides auto winding up to nearly 2 fps and attaches without any need to remove a bottom camera cover.

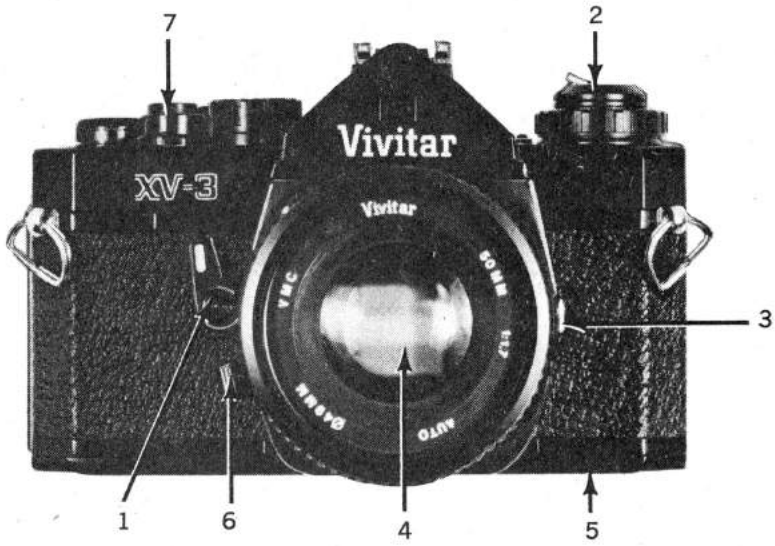

1. Electronic self-timer with blinking diode. **2.** Folded rewind crank. **3.** PC sync terminal. **4.** Pentax bayonet mounted lens. **5.** Provision for auto winder. **6.** Lens release lever. **7.** Shutter release and meter turn on button with lock. **8.** Manual shutter speed dial with locking auto setting. **9.** Auto setting lock release. **10.** X sync hot shoe. **11.** Memory hold meter and self timer cancel button. **12.** ASA index scale. **13.** Auto exposure compensation dial.

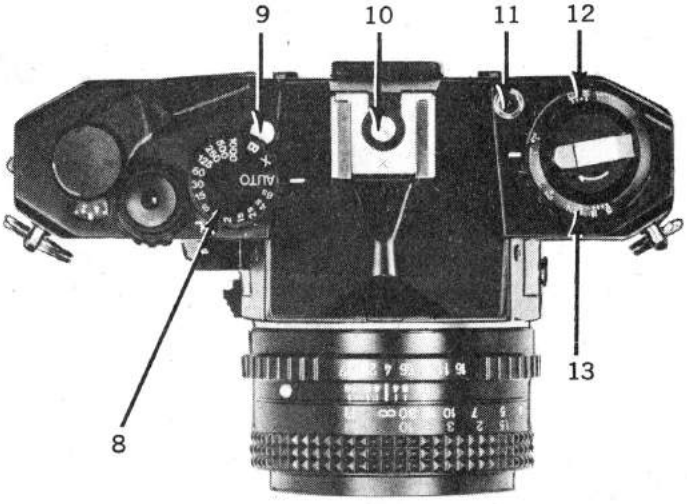

Yashica FR-1

TYPE: 35mm eye-level SLR.
LENS: 50mm f/1.7 Yashica ML in interchangeable Contax-Yashica bayonet mount, stops to f/16, focusing to 21 in.
SHUTTER: Electronically-timed cloth focal plane with speeds from 4 to 1/1000 sec. plus B, X sync, self-timer.
VIEWING: Non-interchangeable eye-level prism with central diagonal split-image rangefinder, microprism collar, full-focusing screen.
OTHER FEATURES: 6-volt silver-oxide-battery powered silicon diode cell in prism housing measures center-weighted area of focusing screen at full aperture for aperture-priority automatic exposure, auto-compensation dial, manual override, shutter speeds, apertures, over and underexposure signals visible in finder, battery and frame counter check light, hot shoe, film box memo holder, provision for multiple exposures, depth-of-field preview, electromagnetic release, provision for auto winder, data back.
PRICE: $535 with 50mm f/1.7 lens, $585 with 50mm f/1.4, $715 with 55mm f/1.2. Black body only.
MANUFACTURER: Yashica Co., Ltd., Tokyo, Japan.
IMPORTER: Yashica Inc., Paramus, NJ 07652.
PHYSICAL DIMENSIONS: 5 9/16 in. wide, 3⅜ in. high, 3½ in. deep.
WEIGHT: 1 lb. 15 oz.

1. Self-timer. **2.** Provision for accessory auto winder with speeds up to 2 frames per second. **3.** Bayonet Yashica ML lens in Contax-Yashica mount. **4.** X-sync-only PC contact. **5.** Concave electromagnetic shutter release. **6.** Electronic remote cable switch terminal. **7.** Manual shutter-speed dial with "auto" setting. **8.** X-only hot shoe sync. **9.** Auto-exposure compensation dial with ¼ to 4x settings. **10.** ASA film-speed index-setting dial.

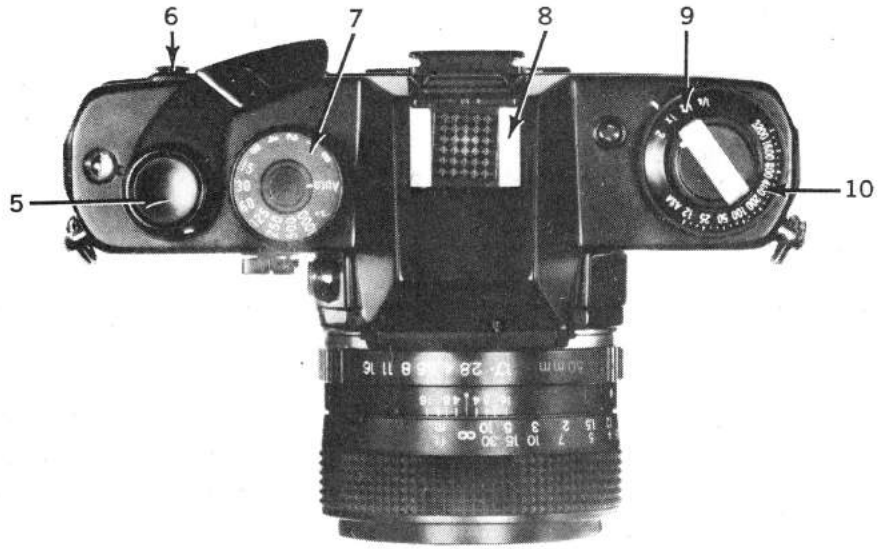

Although the Yashica FR-1 has now been available for some years, few photographers, even knowledgeable ones, know or can detect the heritage of this camera. In actuality it is a beautifully made offshoot of the Yashica-made Contax RTS using the same basic body casting and much of the same mechanisms. In short the FR-1 owner gains much of the Contax RTS's features but at a much more advantageous price. Lenses are interchangeable between the RTS and the FR-1.

The metering circuit can be turned on either by pushing inward on the rapid-wind lever or by pulling it outwards and sliding the meter-turn-on switch to the right. Within the bright viewfinder you'll see a shutter-speed scale with a needle to the right (a departure from Contax RTS operation which used LEDs rather than a needle), a better-than-Contax aperture scale running horizontally at the top, plus a very good central split-image rangefinder and microprism collar. You can select your aperture and watch the meter system select the corresponding shutter speed without having to remove the camera from your eye. On manual operation, when you set your own shutter speeds, a black M flag appears in the finder as a warning. The shutter-speed scale then serves as a guide to check the shutter-speed dial to set the speed you wish. The concave-shaped electro-magnetic shutter release located in the hub of the wind lever is most comfortable, convenient and smooth.

While the Yashica FR-1 is capable of auto exposures down to 4 sec. at full aperture with ASA 400 film, the shutter-speed scale in the viewfinder only indicates speeds to 1 sec. Additional numerals should be added to the viewfinder scale. Other minor criticisms: The 7-sec. self-timer delay is rather short. No eyepiece blind is furnished to prevent extraneous light from affecting the exposure meter reading when the user removes his eye from the finder window during exposure. More than balancing out these criticisms are such features as a battery checklight which also illuminates the frame counter, the beautifully finished, three-clawed stainless steel bayonet lens mount, the provision for electronic remote control cable releases, the bright red warning band in the frame counter indicating film end and start, and handy film-box-end holder at the back of the camera.

Like the Contax RTS and Yashica FR and FR-II, the FR-1 can easily be fitted with an accessory auto winder.

We remain most impressed with the Yashica FR-1 which, like the Contax RTS, handled beautifully during all our tests.

Alpa 11si

TYPE: 35mm single-lens reflex.
LENS: 50mm f/1.9 Macro-Switar, in interchangeable bayonet mount, stops to f/22, focusing to 11 in.
SHUTTER: Cloth focal plane with speeds from 1 to 1/1000 sec. plus B, FP, MX sync.
VIEWING: Fixed eye-level prism with central split-image rangefinder, microprism collar, clear glass collar and crosshairs, full-focusing screen (other screens available on request).
OTHER FEATURES: Mercury battery-powered silicon exposure meter (behind lens) measures center-weighted area at shooting aperture, three meter readout lights, quick-return diaphragm, instant-return mirror, depth-of-field preview, auto-resetting frame counter; accepts lenses in Nikon, Pentax and other mounts with special adapters.
PRICE: $1,465 with 50mm f/1.9 Macro-Switar lens.
MANUFACTURER: Pignons S.A., Ballaigues, Switzerland.
IMPORTER: Karl Heitz, Inc., 979 Third Ave., New York, NY 10022.
PHYSICAL DIMENSIONS: 5¾ in. wide, 3½ in. high, 3½ in. deep.
WEIGHT: 2 lb. 5 oz.

Despite rumors of its impending demise after over 40 years in production, we're happy to report that the Swiss-made Alpa, that most traditional of current SLRs, is definitely alive and apparently well. It remains a bench assembled classic with a super rugged cast alloy body, external auto-diaphragm lenses and a slow-to-operate but accurate metering system.

The "si" designation stands for silicon, the material now used in the 11si's three meter cells. Claimed advantages of the newer cells are faster, "memoryless" readings and improved automatic compensation for extraneous light entering the finder eyepiece (the previous model 11el also had a third rear-pointing CdS cell designed to do the same thing, but the new silicon cell is claimed to be considerably better).

To complement the revised metering system, there are now three (rather than two) metering lights (they're now LEDs) below the si's finder field—a yellow light to indicate overexposure, a red light for underexposure, and a centrally placed green LED to indicate the correct exposure. While we haven't officially tested Alpa's latest model as yet, our initial impression is that the revised meter readouts combined with the new meter cells result in a faster-metering camera that's considerably less "fiddly" in operation than it was before.

Metering with the 11si is straightforward in concept. The sliding switch right next to the front-mounted shutter release has three click-stopped positions. Going from right to left, they're "meter off, shutter button free," "meter on, shutter button free," and "meter on, shutter button locked." Bring the Alpa to eye level with the switch in the middle position, press the Macro-Switar's shutter-release button, and a light comes on in a little window just under the finder area (where it's hard to miss). If the lens is set at a small aperture you'll see the finder darken noticeably, for the Alpa is a classic (some might say dated) stop-down-metering camera, and you must meter at shooting aperture rather than wide open as with most other current SLR's.

The Switar lens extends 2⅝ in. (65mm) from the camera body at its closest marked focusing distance of 11 in. (27.9cm) and in this position you can marvel at the focusing barrel which is adorned with three rows of footage and inch markings in white, reproduction ratios in red, and a pair of exposure increase factor—1.5X and 1.8X—in green.

Basically the Alpa 11si is an almost-system camera that's carefully made in a small factory in limited quantities. It's characterized by fanatical attention to many mechanical details with a fine disregard for production economies, but it's also saddled with an external auto-diaphragm system and a film-advance lever you have to learn to love. Like all limited-production European classics, Alpas attract a small, but devoted following.

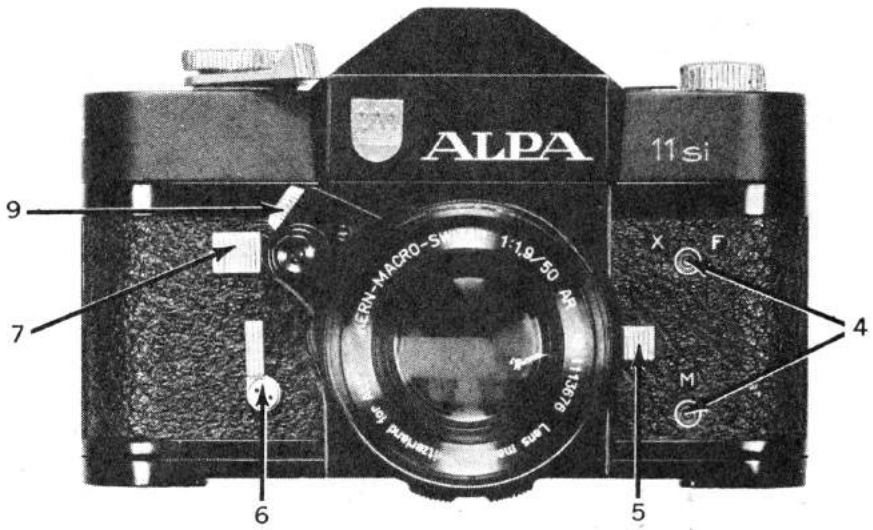

1. Shutter-speed dial. **2.** ASA scale. **3.** Wind lever. **4.** Sync terminals. **5.** Lens-release lever. **6.** Self-timer. **7.** Meter switch. **8.** Shutter release. **9.** Depth-of-field preview button. **10.** Auxiliary-metering window. **11.** Focusing ring.

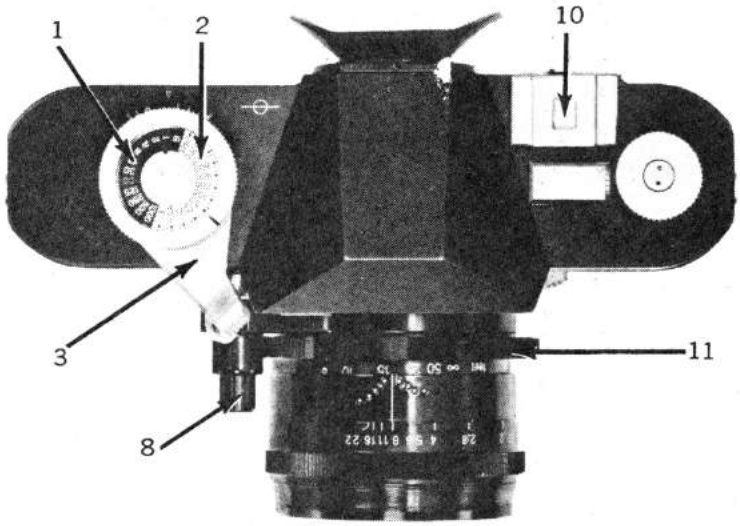

Asahi Pentax MX

TYPE: 35mm eye-level SLR.
LENS: 50mm f/1.7, f/1.4, f/1.2 or 40mm f/2.8 SMC Pentax-M in interchangeable bayonet K mount, stops to f/22, focusing to 18 in. (40mm f/2.8 to 24 in.).
SHUTTER: Cloth focal plane with speeds from 1 to 1/1000 sec. plus B, FP, X sync.
VIEWING: Fixed eye-level prism with interchangeable central split-image rangefinder, microprism collar, full-focusing screen.
OTHER FEATURES: Silver-oxide battery-powered gallium arsenic phosphorous photo diodes, on either side of the finder eyepiece, measure center-weighted picture area of focusing screen at full aperture, shutter release lock, shutter wind reminder, film box reminder slot, hot shoe, self-timer, preview lever, accepts motor winder and motor drive.
PRICE: $504.16 with 50mm f/1.7 lens, $592.00 with 50mm f/1.4, $688.33 with 50mm f/1.2, $497.10 with 40mm f/2.8. Black body, $20.00 additional.
MANUFACTURER: Asahi Optical Co., Tokyo, Japan.
IMPORTER: Pentax Corp., Englewood, CO 80110.

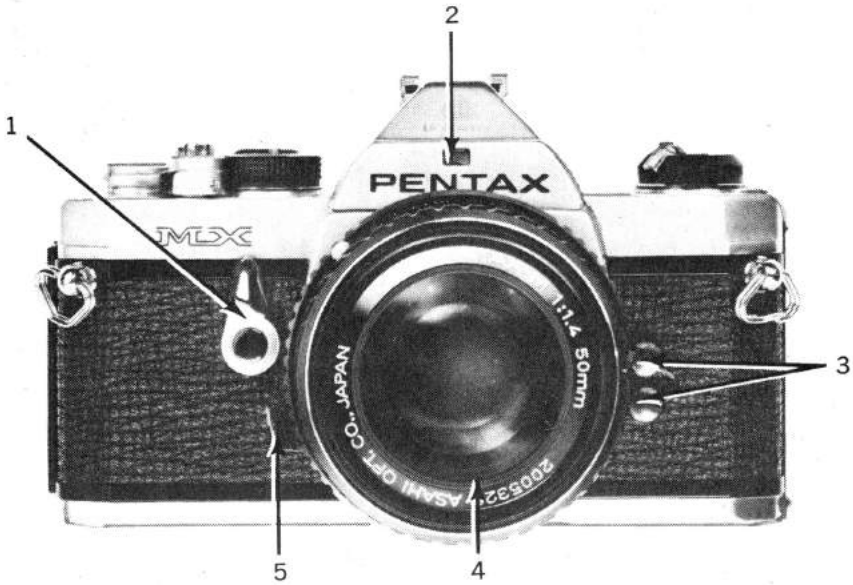

1. Combined self-timer/depth-of-field preview lever. **2.** Aperture window reflects lens opening numeral into viewfinder. **3.** X and FP PC-sync terminals. **4.** Compact Pentax lens in K bayonet mount. **5.** Lens-mount release lever. **6.** Shutter-speed dial. **7.** Shutter release with lock also turns on exposure-metering circuit. **8.** ASA film-speed setting window. **9.** Rewind knob with folded rapid-rewind lever. **10.** Accessory shoe with X sync contact.

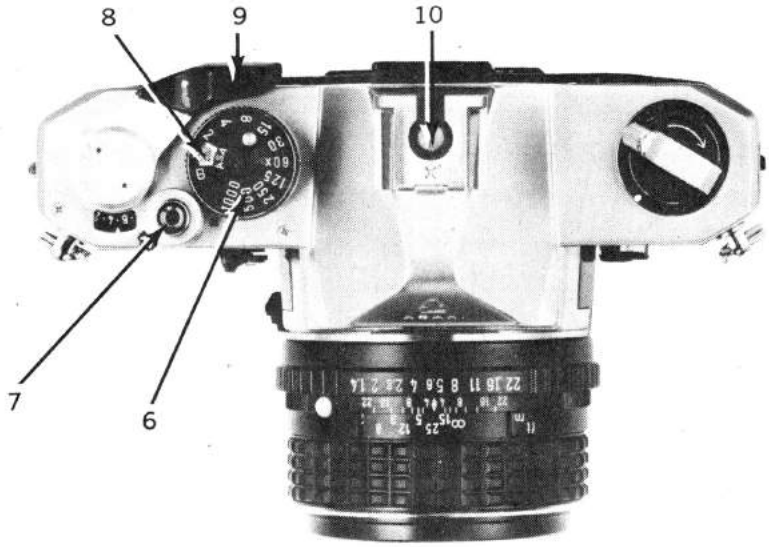

PHYSICAL DIMENSIONS: 5⅜ in. wide, 3¼ in. high, 3 7/16 in. deep.
WEIGHT: 26 oz.

While the equally small Pentax MX may be outshined for many amateurs by the auto exposure of the Pentax ME, the MX is a far more sophisticated, more professionally oriented instrument. Basically, it's a full system (interchangeable screens, backs, 5-fps motor and 2-fps winder) camera with mechanical shutter and what might be called a matched-needle metering system—only there is no matched-needle. Instead, within the extremely bright and large finder, to the right, is a transparent dial indicating shutter speeds set. Adjacent to the dial are five light-emitting diodes which turn on with slight pressure on the shutter release. The green diode in the center indicates proper exposure, adjacent orange dots indicate ±½ f/stop of correct exposure, apertures are also indicated at the top of the screen but can be somewhat difficult to read. The split-image rangefinder and microprism collar are very efficient and the entire screen plus exposure information can be seen by eyeglass wearers. Viewing screens can be interchanged from within the mirror chamber. Eight screens accommodate the 40-plus lenses in the system.

The gallium arsenic phosphorous cell meter circuit provides virtually instantaneous readings even when going from very bright to dark areas or vice-versa. Exposure accuracy tested out to be within ½ f/stop throughout the metering range with the shutter also operating within ½ f/stop of its marked speeds. With ASA 400 film, the camera provided readings down to ¼ sec. at full aperture.

Camera loading is extremely efficient. A unique (to Asahi) multiple plastic rod covered take-up spool is perhaps the easiest yet to thread with the end of a film leader. Shutter wind with the comfortable, plastic-tipped lever can be accomplished in a single 162° throw of the wind lever or in shorter strokes. Shutter noise and vibration are very low. The MX does not have provisions for double exposures or mirror lockup but the latter does seem a feature now disappearing from the more expensive, smoother-operating SLRs.

While it might appear that the MX camera body is identical to the Pentax ME, it isn't at all. Except for the common K-mount lenses, silver oxide batteries and eyepiece correction lens holders, the cameras are completely different (although the MX shows the same fine construction and finish as the ME).

The MX winder looks somewhat like that of the ME and operates in a similar manner but needs four AA cells instead of six and offers speeds up to 2 frames per second continuously. There's also a single-shot setting. For the photographer seeking a compact non-automatic camera system, there are few to match the ME.

Canon F-1

TYPE: 35mm eye-level SLR camera.
LENS: 50mm f/1.4 S.S.C. Canon in interchangeable Canon breech-lock mount, stops to f/16, focus to 18 in.
SHUTTER: Titanium focal plane with speeds from 1 to 1/2000 sec. plus B, FP, X sync, self-timer.
VIEWING: Interchangeable eye-level prism, interchangeable screen with central microprism, fine-focusing collar, full-focusing screen.
OTHER FEATURES: Mercury battery-powered CdS meter, behind lens, measures central marked area at full or working aperture, depth-of-field preview, mirror lock-up, self-timer, shutter speeds visible in finder, provision for double exposures, motor drive and bulk-film back, low-light level meter, automatic servo EE exposure control, film tab slot.
PRICE: $868.50.
MANUFACTURER: Canon Camera Co., Tokyo, Japan.
IMPORTER: Canon USA, Inc., Lake Success, NY 11040.
PHYSICAL DIMENSIONS: 5⅞ in. wide, 3⅞ in. high, 4⅛ in. deep.
WEIGHT: 2 lb. 9 oz.

While Canon's engineering skills have produced some of the most advanced electronic SLRs over the past few years, the F-1 stands as the rugged workhorse of the line. This is a camera to build on, with different finders, excellent motor drive, bulk-film loading unit, and one of the best lens systems extant.

The F-1 can be coupled to an accessory servo motor, automatic-exposure control and a low-light level booster meter. All the elements of the F-1 system have the typical Canon touch of fine workmanship with handsome design and surface finish. Even older Canon lenses fit this camera, though they meter only at working aperture, unlike the current FD lenses, which meter either at full or working aperture. The Canon breech-lock lens mount ensures wobble-free mounting with easy interchangeability. It's the only system having the advantages of bayonet-lens interchangeability and automatic adjustment for lens mount wear.

Inside the viewfinder of the F-1 is an interesting array of features. A choice of focusing screens accommodates a wide range of preferences. The standard screen has a central microprism, fine-focusing collar and a slightly darker rectangle which shows the image area being exposure-metered. The other screens offer a split-image rangefinder, fine matte circle and rulings for technical and architectural photography. All four screens have the rectangular metering area clearly delineated. Eyeglass wearers can see the entire screen, including the off-screen meter needle and shutter-speed indications. In addition to the under and overexposure warning areas, the entire metering window turns red when the shutter speed or aperture you've selected is outside the meter coupling range for the ASA you've set. This usually happens with a high-speed film and very slow shutter-speed. ASA range is now up to 3200.

The back-opening system has a double safety lock. You engage a locking button to actuate the rewind lever latch. The rapid-wind lever is ratcheted and operates smoothly in a single stroke of 139°. Press the rewind button, cock the shutter and the F-1 gives you double exposures.

Electronic flash synchronizes at speeds up to 1/60 sec.; FP bulbs can be used from 1/125 to 1/2000 sec. and 1/30 sec. or slower, while M bulbs may be used at speeds of 1/30 sec. and slower only.

The F-1 metering system was accurate to within ¼ f/stop over most of its range on our Kyoritsu EE-7D tester. Its metering range extends down to f/1.4 at 1/15 sec. with an ASA 400 film.

The Servo EE finder turns the F-1 into an automatic-exposure camera. The user selects the shutter speed and the built-in servo motor sets the correct aperture as determined by the EE finder's own center-weighted meter system. When used with the MF motor drive, power for the EE finder can be drawn from the motor-drive unit.

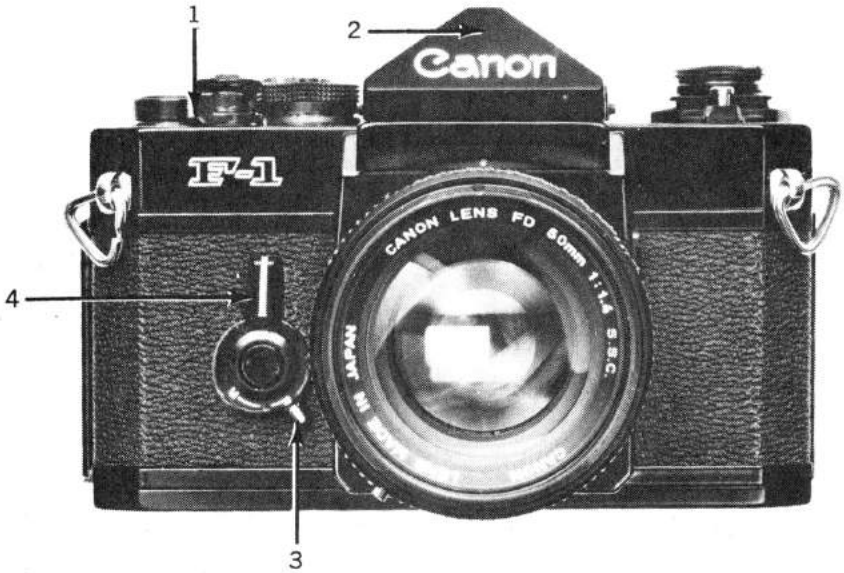

1. Shutter lock. **2.** Interchangeable eye-level prism. **3.** Combined metering mode/mirror lock-up switch. **4.** Combined depth-of-field preview lever for stop-down exposures/self-timer lever. **5.** Locking shutter-release button. **6.** Film advance wind lever. **7.** Manual shutter-speed dial for 1 to 1/2000 sec. plus B/ASA film index with indices 25 to 3200. **8.** Interchangeable prism-lock buttons. **9.** Meter-switch battery check. **10.** Locking FP and X sync PC flash terminal. **11.** Back latch button.

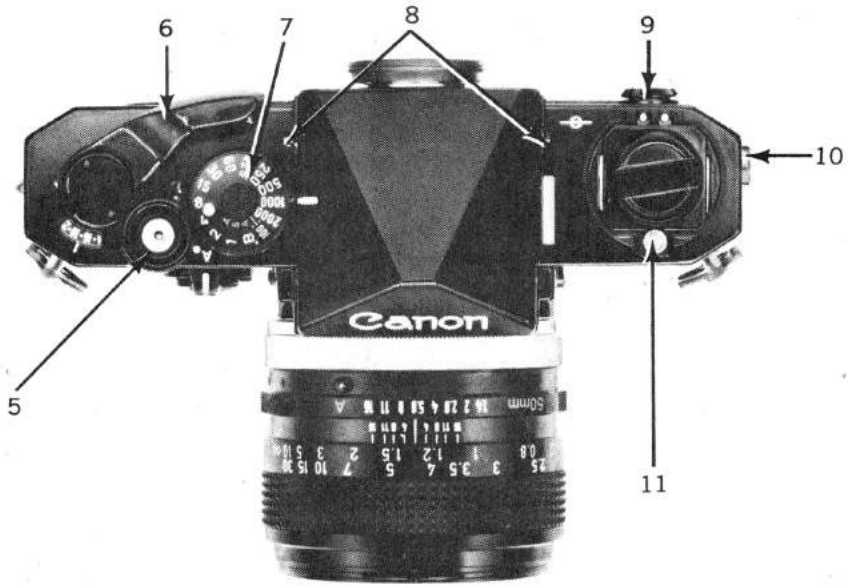

Fujica ST801

TYPE: 35mm eye-level SLR.
LENS: 55mm f/1.8 EBC Fujinon in interchangeable Pentax-Pentacon screw-thread mount with locking pin, stops to f/16, focusing to 18 in.
SHUTTER: Cloth focal plane, metal reinforced, with speeds from 10 to 1/2000 sec. plus B, X, FP sync, self-timer.
VIEWING: Non-interchangeable eye-level prism with central split-image rangefinder, microprism collar, fine-focusing collar, full-focusing Fresnel screen.
OTHER FEATURES: Silicon cells on either side of eyepiece average light from focusing screen at full or working aperture, light-emitting diodes for aperture, shutter-speeds visible in finder, hot shoe sync.
PRICE: $425 with 55mm f/1.8 EBC Fujinon, $475 with 50mm f/1.4.
MANUFACTURER: Fuji Photo Film Co., Ltd., Tokyo, Japan.
IMPORTER: Fuji Photo Film USA, Inc., New York, NY 10001.
PHYSICAL DIMENSIONS: 5 in. wide, 3 5/16 high, 3½ in. deep.
WEIGHT: 1 lb. 14 oz.

Fuji Photo made the first move several years ago to bring us a brand-new viewfinder with light-emitting diodes to indicate exposure rather than a mechanical needle system. Now, LEDs are cropping up all over the place, but the ST801's basic concept of a seven-light display is still a good one.

First, set the film speed (ASA 25-3200) by lifting the knurled shutter-speed dial (8) and turning its outer ring until the proper number appears in a little cutout just below the "B" setting. Now, release the outer ring and manually select a shutter speed. When you look through the viewfinder, the shutter speed appears in white on the far left.

The right side of the finder is needleless. It's adorned with a centrally placed meter index cutout, a white-on-black plus sign with a down-pointing arrow just above it, and an equally visible minus sign and up-pointing arrow below it. Nothing visibly startling happens until you press the shutter release partway down, causing a pretty vertically-sequential display of little red lights starting from the bottom. While rotating the nicely knurled aperture ring, you can center the light (or the brightest of the two if two are lit) opposite the index mark just as though it were a needle.

Unlike a moving needle, these little electronic lights are clearly visible either in brilliant sunlight or the proverbial coal bin. If all LEDs are dark save the central one opposite the index mark, you've got the correct exposure-setting on the nose. Keep the camera in exactly the same metering position and select the next smallest f/stop and the light "moves" to the LED just below it (toward the minus sign), indicating a one-stop underexposure. Since there are seven LEDs, the ST801 reads up to three stops above or below the "correct" setting.

Its range can only be described as extraordinary. There are a few other in-camera meters that'll get you down to f/1.4 at ¼ sec., with Kodak Tri-X, but how many can meter at 1/2000 sec. at f/32?

The focusing screen is discernibly brighter than average for a 35mm SLR and this makes focusing with the normal 55mm f/1.8 lens smooth and positive.

Turning to the 801's horizontal cloth focal-plane shutter, our tests showed a commendable degree of accuracy.

Unlike its predecessor, the ST701, the ST801's Pentax-type screw-thread lens locks in position. To mount the lens, just screw it in until it clicks. To remove it, push inwards on a marked tab just in back of the lens on the lower right to release the lock and unscrew it.

Optically, the 55mm f/1.8 is a good picture taker. The virtual absence of ghost images must be credited to Fuji's Electron Beam Coating (EBC), a more even and controllable multicoating process.

All in all, we found the compact Fujica ST801 an eminently capable machine, straightforward in operation and offering an unusually bright finder. It's above average in performance, and good handling characteristics make it a pleasure to use.

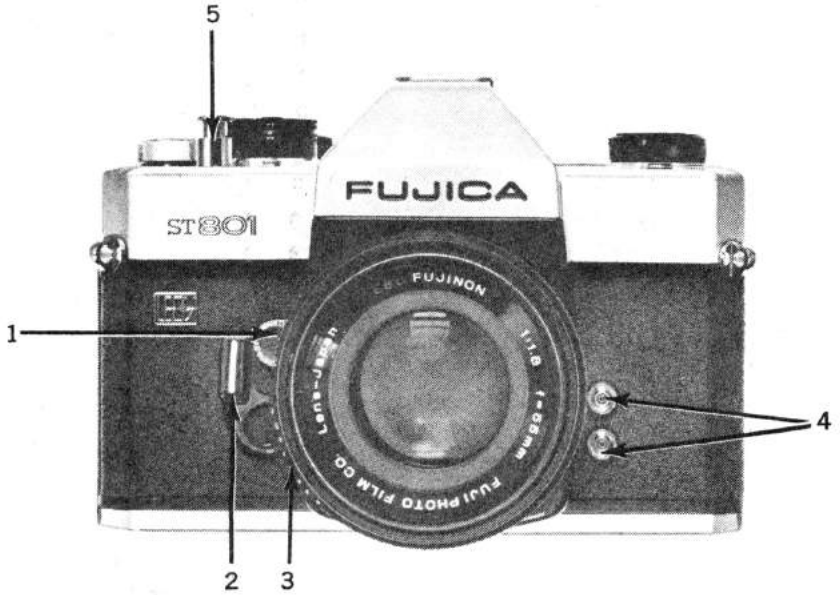

1. Depth-of-field preview button useable for making stop-down auto exposures. **2.** Self-timing lever for delayed shutter release of 8 sec. **3.** Lens release button. **4.** PFX sync flash terminals. **5.** Shutter-release button. **6.** Film-advance wind lever. **7.** ASA film-index dial with indices 25 to 3200. **8.** Manual shutter-speed dial with speeds from 10 to 1/2000 sec., plus B.

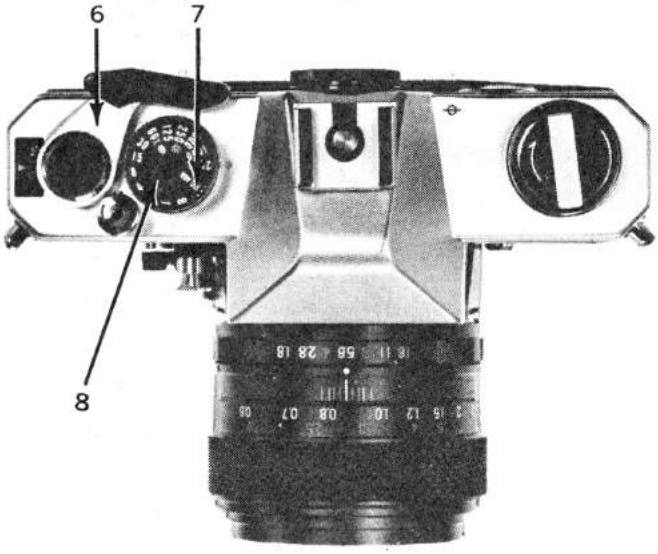

Minolta SR-T201

TYPE: 35mm eye-level SLR.
LENS: 50mm f/1.4 Rokkor-X in interchangeable bayonet mount, stops to f/16, focusing to 1.75 ft.
SHUTTER: Cloth focal plane with speeds from 1 to 1/1000 sec. plus B and X sync, self-timer.
VIEWING: Fixed eye-level prism and microprism spot, groundglass collar, full-focusing screen.
OTHER FEATURES: One mercury battery powers circuit using two CdS cells in series to produce Contrast Light Compensating measurement of entire screen at full aperture, shutter speeds and match-needle indicators visible in finder, depth-of-field preview, self-timer, built-in hot shoe and X-sync terminal, film-type reminder slot for film-box end.
PRICE: $472 with 50mm f/1.4 Rokkor-X lens; $566 with 50mm f/1.2 Rokkor lens.
MANUFACTURER: Minolta Camera Co., Ltd., Osaka, Japan.
IMPORTER: Minolta Corp., 101 Williams Drive, Ramsey, NJ 07446.
PHYSICAL DIMENSIONS: 5⅝ in. wide, 3½ in. high, 3½ in. deep.
WEIGHT: 2 lb. 4½ oz.

Out of the entire SR-T lineage, the 201 remains as sole survivor and a camera that has proven itself reliable over many years. Basically unchanged, the present 201 reverts back to split-image focusing within a microprism collar.

Over the years, all the various SR-Ts have accumulated a few refinements here and there but, stack up the present 201 against an older model, and you look long and hard before discerning a real difference. Since the SR-Ts have proven themselves among the best match-needle metering SLRs over the years, the overriding philosophy may be: Why spoil a good thing at this point?

Recent changes—inherited from the 202—include a convenient film-box-end flap holder to remind you of the film within; a welcome coin-slotted battery compartment cover and a shutter-cocking mechanism that prevents advancing the wind lever while your finger is still on the shutter release button. There is also one flash sync terminal for X-sync only. in addition to the hot shoe on top, and a depth-of-field preview button that must be held in place to stop down the lens. Minolta has also eliminated the mirror lockup, but this does not seem to adversely affect telephoto shots.

Looking closer, we find the multiple focusing option of a clear-cut microprism circle within a ground-glass collar, plus a Fresnel matte screen. Shutter-speed settings are clearly displayed within a band at the viewfinder's bottom. And there is the familiar matched needle arrangement at the right of the finder. Change either the f/stop or shutter speed and needles overlap.

To load, pull up the film-rewind knob in the conventional way, pull the film leader across and slip it into a large, convenient take-up spool slot. The shutter cocks with an easy "half-throw" of the winder lever. The shutter button itself has a smooth, comfortable release.

To change film speed, simply lift up on the knurled dial next to the wind lever and turn. Shutter speeds, on the same dial, click positively into place. The self-timer, as tested, provides a full 10-sec. interval before releasing the shutter. One recent change for the body lens coupling: It's now a hard plastic.

Minolta provides three normal lenses for the 201 (and other Minoltas): a six-element 50mm f/1.7, a seven-element 500mm f/1.4 and a seven-element 50mm f/1.2. Exterior embellishments include easy-to-grip diamond-studded rubberized focusing rings, a large knurled shutter-speed dial, f/stops in white for better visibility, and lens caps with tab grips that hold securely.

The matched-needle metering system (with Rokkor and Rokkor-X lenses), using Minolta's famous Contrast Light Compensator approach, remains the same; that is, it balances out most unusually contrasty scenes without having to open up or close down, as with averaging-type systems.

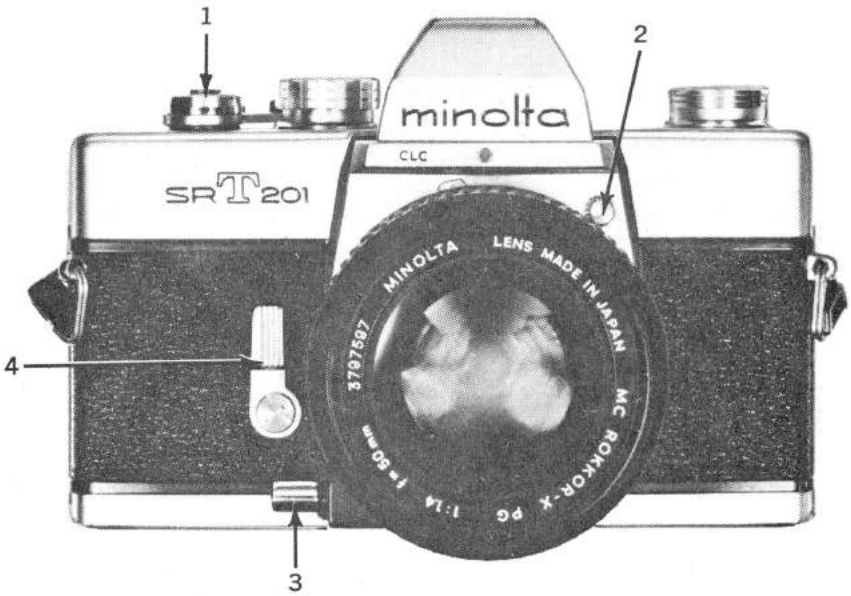

1. Shutter-release button. **2.** Lens-release locking button. **3.** Depth-of-field preview button, usable for making stop-down auto exposures. **4.** Self-timing lever for delayed shutter release. **5.** Film advance wind lever. **6.** Manual shutter speed dial with speeds from 1 to 1/1000 sec., plus B. **7.** X-sync PC flash terminal. **8.** ASA film-index scale with indices from 60 to 6400.

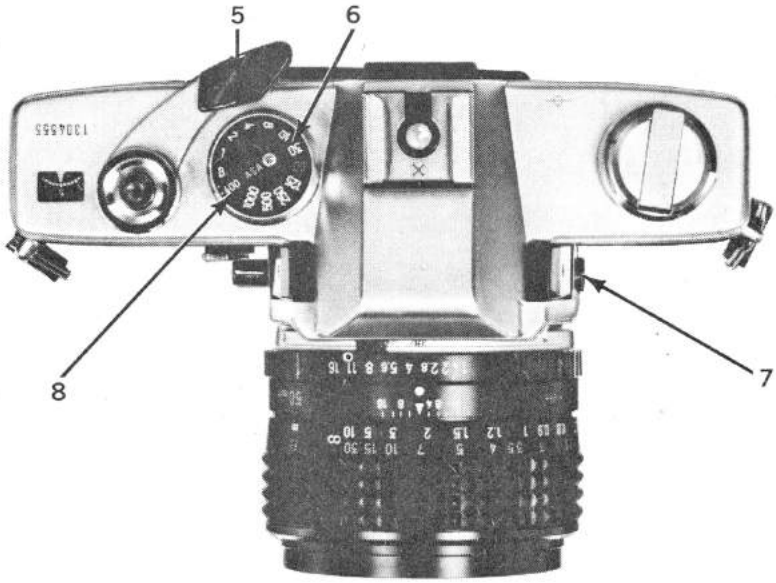

Nikon F2AS Photomic

TYPE: 35mm eye-level single-lens reflex camera.
LENS: 50mm f/1.4 Nikkor in interchangeable bayonet mount, stops to f/16, focusing to 1½ ft.
SHUTTER: Quilted titanium-foil focal plane with speeds from 10 to 1/2000 sec. plus B, FP, X sync.
VIEWING: Interchangeable eye-level prism with interchangeable screen, central split-image rangefinder, microprism collar, full-focusing screen.
OTHER FEATURES: Silver-oxide battery-powered silicon photo-diode circuit cells on either side of finder eyepiece measure center-weighted area at full aperture, aperture and shutter speed visible in finder, diode light exposure control in finder and atop prism, Nikon electronic flash ready light visible in finder, mirror lockup switch, self-timer, provision for optional EE aperture-control attachment, film-box end reminder slot.
PRICE: $1,149.50 with 50mm f/2, $1,172.50 with 50mm f/1.8, $1,278 with f/1.4, $1,399.50 with 50mm f/1.2. Black body, $23 additional.
MANUFACTURER: Nippon Kogaku K.K., Tokyo, Japan.
IMPORTER: Nikon Inc., Garden City, NY 11530.
PHYSICAL DIMENSIONS: 6 in. wide, 4 5/16 in. high, 3 15/16 in. deep.
WEIGHT: 2 lb. 4 oz.

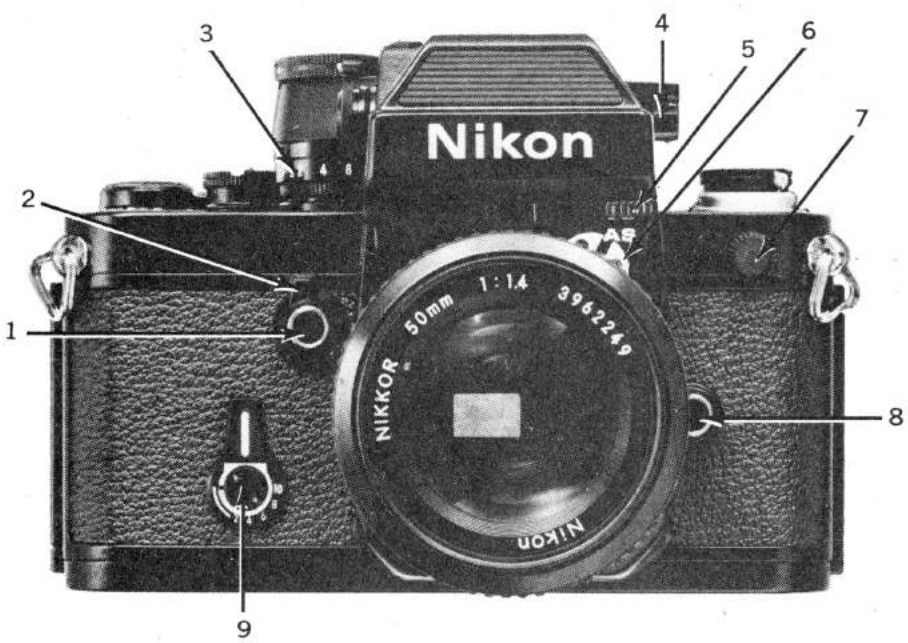

1. Depth-of-field preview button. **2.** Mirror-lockup level. **3.** Shutter-speed dial. **4.** Automatic-exposure EE aperture-control connector. **5.** Auto-indexing pin release. **6.** Lens-coupling prong for non-AI (auto indexing) camera bodies. **7.** PC sync terminal. **8.** Lens-mount release button. **9.** Combined self-timer/slow shutter-speed control lever. **10.** Wind lever. **11.** ASA dial. **12.** Exposure-control diode. **13.** Shutter-speed illuminating panel. **14.** Viewfinder flash-readylight connection. **15.** AI coupled Nikkor lens. **16.** Shutter release.

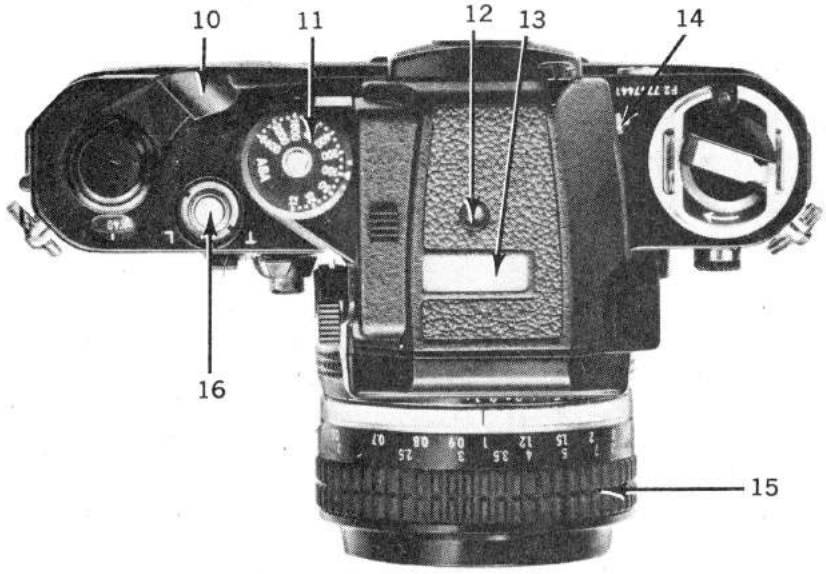

The camera by which all other "pro" SLRs are measured goes on unchanged since last year—which is how pros like it. In its most versatile (and expensive) version it's known as the F2AS, having the same camera body as the F2A but incorporating silicon photo diodes instead of CdS circuitry and LEDs rather than a meter needle. It remains the most advanced and versatile version of any Nikon camera. Like all modern Nikons, the F2AS offers automatic maximum aperture indexing of AI lenses and direct readings of apertures in the finder reflected right from the lens barrel itself.

Within the viewfinder you'll see a central red diode light, a plus sign to the left and a minus sign to the right. Further left is an aperture window and to the right, the shutter speeds appear. When exposure is correct, only the central red diode lights. If exposure is more than ± 1/5 f/stop off but not more than one f/stop, either the plus or minus sign will also light depending on which way the exposure is incorrect. If the exposure is more than one f/stop off, only the plus or minus signs will light. This system provides far greater precision in determining exposure plus increased operation convenience. In addition, the immediate reading of one f/stop of over or under-exposure makes exposing at such levels quite simple for bracketing exposures when desired.

The prism top has another LED readout so exposure can be read from the top of the camera for low-level shots or when the camera is mounted on a copystand or similar accessory.

The Nikon underneath whatever prism you do purchase remains the prime choice of most professionals (even though many other camera manufacturers—Canon, Minolta and Olympus are still hard on its heels). The reasons behind this choice—and perhaps any amateur's choice as well—are three-fold: undeniable precision, quality, and the vast extent of sophisticated accessories—motor drives, backs, finder screens, special lenses, convertibility to auto exposure. The Nikon F2AS Photomic, aside from its metering prism, remains primarily a mechanically operating camera among a proliferation of electronic ones. It is Nikon's contention that it is far better to have a tried, reliable workhorse mechanism than highly advanced innards whose owners then become the guinea pigs from whom the camera makers discover faults and defects. Even so, the F2AS provides an incredible exposure reading range down to 8 sec. at f/1.4, can be hooked up to an EE servo attachment for shutter-speed-preferred exposure automation and now has a brand new compact motor drive, the MD-3.

Olympus OM-1N

TYPE: 35mm eye-level single-lens reflex camera.
LENS: 50mm f/1.8, 1.4 or 55mm f/1.2 Zuiko in interchangeable bayonet mount, stops to f/16, focusing to 18 in.
SHUTTER: Cloth focal-plane with speeds from 1 to 1/1000 sec. plus B, FP and X sync, provision for screw-in hot sync shoe, self-timer.
VIEWING: Non-interchangeable eye-level prism with interchangeable central microprism, full-focusing screen.
OTHER FEATURES: CdS cells on either side of the viewfinder eyepiece measure center-weighted picture area at full aperture, meter pointer visible in finder, mirror-lockup switch, locking PC terminal.
PRICE: $408 with 50mm f/1.8 lens; $472 with 50mm f/1.4; $601 with 55mm f/1.2, $28 additional for black body.
MANUFACTURER: Olympus Optical Co., Ltd., Tokyo, Japan.
IMPORTER: Olympus Camera Corp., Woodbury, NY 11797.
PHYSICAL DIMENSIONS: 5 3/16 in. wide 3 in. high, 3 3/16 in. deep.
WEIGHT: 1 lb. 10 oz. with f/1.8 lens.

As the pace-setter and sire for today's fast-running field of pony-sized SLRs, Olympus' OM-1 has a secure place in the history of photo technology. The new OM-1N is very much a camera for the present. Its mechanical innards, match-needle through-the-lens CdS metering, snug, comfortable feel, versatility, motor adaptability, and interchangeable focusing screens fit it well for hard field use. A good (non-electronic) body for cold weather.

With the new OM-1N, Olympus engineers have added in-viewfinder flash charge and sufficient light LED indicators (when coupled with their new T-20 dedicated flash), a re-shaped, ratcheted wind lever with a shorter stroke, minor changes in the rewind release and strengthened shoulder strap eyelets. A variety of interchangeable hot shoes are available but the camera comes with Shoe 4 which is usable for sync alone with most hot shoe flashes or with the T-20 for full finder information. Internal updates include pressure plate changes and inclusion of a special internal contact to operate the Recordata back.

Once you get past your initial amazement at the OM-1's small size, you begin to perceive its identity as a conventional center-weighted, full-aperture metering, match-needle, bayonet-mount SLR. To activate the meter you first set the film speed (ASA 25-1600) by pressing on a small silver button just behind the shutter release, and then rotating what looks like a common garden-variety shutter-speed dial until the proper number lines up with the index mark on the shutter-release collar. You then turn a large, clearly marked meter switch at the left of the pentaprism to the "on" position, and center the needle on the viewfinder's left side in the middle of two pincers labeled plus (above) and minus (below) by rotating either the shutter-speed dial (located "around the lens") or the lens-aperture ring (at the very front of the lens).

Once you get the hang of grabbing for the camera controls in the right places the meter works very well. Finding the two ⅝-in.-long knurled tabs to turn the shutterspeed dial can be a bit of a nuisance with the camera at eye-level, but its accuracy is excellent, reading to within ½ stop of absolute accuracy throughout its entire range.

The Olympus engineers have managed to squeeze an almost life-size finder image out of the 50mm lens by incorporating greater than usual magnification in the rear eyepiece. The finder also shows a commendable 97 percent of the actual image on the negative. The overall viewing image is definitely brighter than normal and almost the entire field, including the needle and metering index, is visible by eyeglass wearers. There are no shutter speeds or apertures visible in the finder.

If, like some of us, you've always longed for a 35mm single-lens reflex about the same size as an M-series Leica and virtually as quiet and refined, take a good look at the Olympus OM-1N.

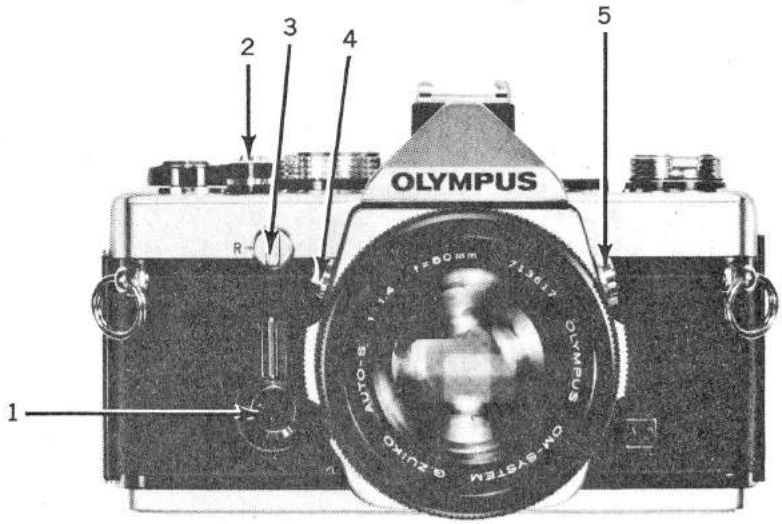

1. 4-12 sec. mechanical self-timer. **2.** Shutter release threaded for cable release. **3.** Rewind release lever. **4.** Mirror lockup lever. **5.** M and X selector switch and locking PC terminal. **6.** Shutter-speed control ring lug. **7.** ASA-index-scale release button. **8.** Ratcheting 130° wind lever. **9.** ASA index scale. **10.** Connection point for interchangeable hot-shoes under Olympus Shoe 4, illustrated here. **11.** Meter switch. **12.** Shutter-speed setting ring.

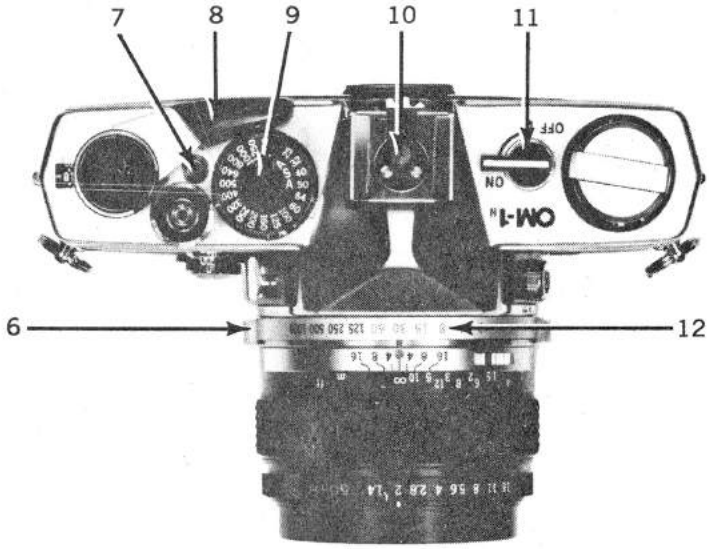

Topcon Super DM

TYPE: 35mm eye-level single-lens reflex.
LENS: 50mm f/1.4 GN Topcor M in interchangeable bayonet mount, with stops to f/16, focusing to 15 in.
SHUTTER: Cloth focal plane with speeds from 1 to 1/1000 sec. plus B, FP, X and M sync, self-timer.
VIEWING: Interchangeable eye-level prism with interchangeable split-image rangefinder, fine-focusing collar plus full-focusing screen.
OTHER FEATURES: Mercury-battery-powered CdS cell behind slits in reflex mirror measures picture area at full aperture, depth-of-field preview lever, battery-operated auto winder with attached carrying strap, provision for electric motor drive and instant-attaching bulk-film magazine, meter needle visible in finder.
PRICE: $1180 with 50mm f/1.4 GN Topcor M lens.
MANUFACTURER: Tokyo Optical Co., Ltd., Tokyo, Japan.
IMPORTER: Photo America Corporation, Miami, FL 33126.
PHYSICAL DIMENSIONS: 6 in. wide, 3¾ in. high, 3 15/16 in. deep.
WEIGHT: 2 lb. 10½ oz.

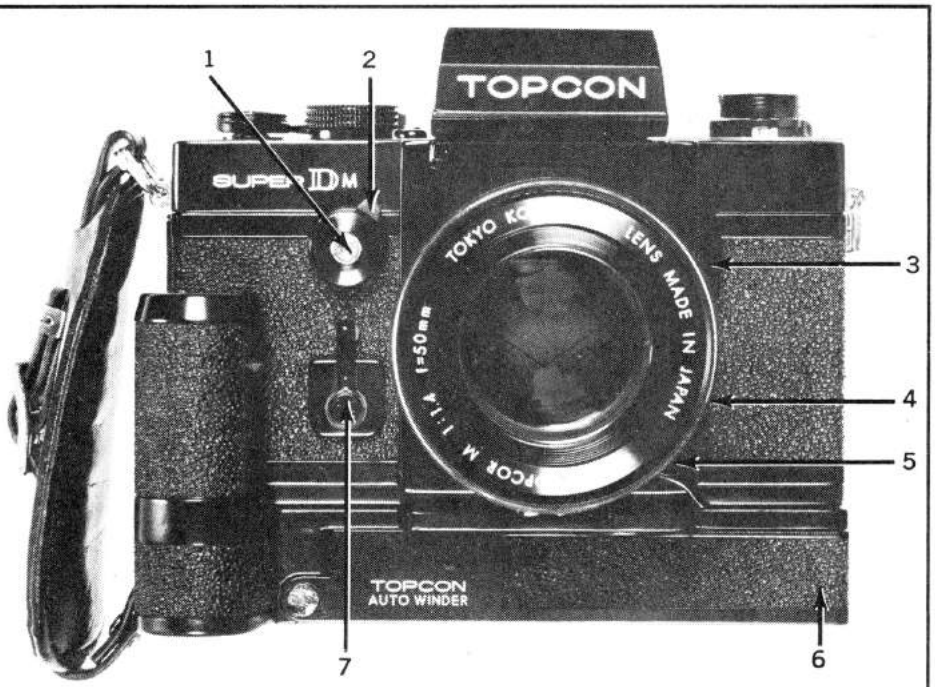

1. Shutter release. **2.** Shutter-release lock. **3.** Depth-of-field preview lever. **4.** Lens-lock lever. **5.** Combination mirror lockup and diaphragm stop-down lever. **6.** Removable one-shot Auto Winder. **7.** Self-timer with 9-sec. delay time. **8.** Single-stroke wind lever. **9.** Shutter-speed dial for 1 to 1/1000 sec. plus B. **10.** External meter indicator window. **11.** Indicator for flash guide numbers 32 to 250. **12.** Prism release lock. **13.** ASA film speed index scale.

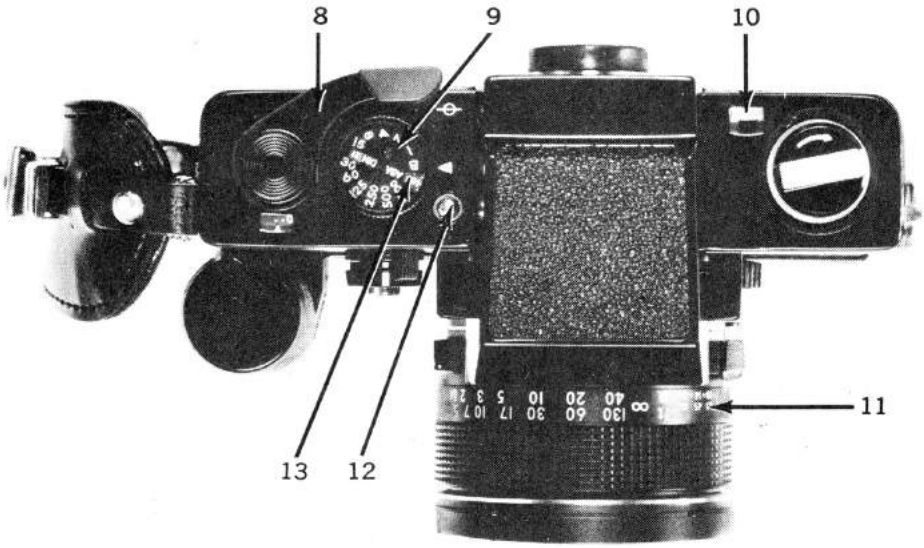

Topcon's firm belief in the "if it's right, leave it alone" philosophy is best proved by the durable Super DM. It's been over 10 years since this solid machine first appeared, sporting a "revolutionary" behind-lens meter and the world's first auto winder. That meter actually is behind the mirror, making prism interchange easy an J practical. Add a fine group of lenses to these "firsts" and you know what makes the DM a long-running show.

Topcon's auto winder (6) simply takes the place of the traditional thumb-operated film-advance lever (though the manual lever [8] is present and operational). As you relax your finger pressure on the shutter button (1), film is automatically advanced to the very next frame. It takes about ¾ sec. per frame and is accompanied by an average decibel whir—that's it. If this one-at-a-time film advance strikes you as anticlimactic (or you think you've got the fastest lever-advanced thumb in the West), just try to fire your SLR as rapidly as a DM Topconeer. As his camera rests serenely cradled against his cheek, yours will generally be jouncing around as you wind the film rapidly. In other words, Topcon's little auto-winding motor *does* increase most people's practical photographic firepower more than the bare specifications might indicate. It's almost always faster than a manual film-advance lever.

The Super D and its predecessors have long been blessed with one of the most convenient systems of prism- and screen-unit interchangeability around. To remove the prism, you just push down on a little chrome button (12) to the left of the shutter-speed dial and slide the prism back out of its grooved slot. The screen lifts out easily by hooking even a chewed-up fingernail under the large tab at its rear and lifting upwards. The innovation comes in the form of the overhanging prism front adorned with the Topcon nameplate. Look under it and you'll see a squarish aperture, behind which is a prism which reflects the large white-on-black apertures off the lens aperture ring into a little box just above the finder area. This system works extremely well. You can see the apertures clearly in virtual darkness as well as in bright sunlight, and you needn't shift your eye very much in order to do so. Our only gripe is that you can't see the shutter speeds in or around the viewfinder area.

Optically, the largish 1¾-in.-deep, 2⅝-in.-diameter lens performed very well under a wide variety of lab and field conditions. But ultimately we've got to get back to handling, for this in our opinion is the DM's reason for being. If a precision full-aperture, match-needle, behind-lens metering SLR—even with an electric film wind—doesn't *sound* too exciting by today's standards, we can only say that using the Topcon Super DM proved to be infinitely more informative than reading the spec sheet. Perhaps the best proof of this is the current auto-winder boom!

Leica M4-2

TYPE: 35mm rangefinder camera.
LENS: 50mm f/1.4 Summilux or 50mm f/2 Summicron in interchangeable bayonet mount, apertures to f/16, focus to 28 in. Current Summicrons are made in Canada.
VIEWING: Combined optical range-viewfinder with auto-parallax-compensating bright frames for 35, 50, 90, and 135mm lenses.
SHUTTER: Mechanically-controlled cloth focal-plane with speeds of 1-1/1000 sec., plus B, MX sync.
OTHER FEATURES: Viewfinder framelines automatically positioned when appropriate Leitz lenses are mounted, keyway under removable baseplate accepts electric motor winder, fixed quick-loading take-up spool, removable hinged back section, manual finder-frame selector lever, hot shoe, accepts coupled CdS exposure meter.
PRICE: $1815.00 with 50mm f/1.4 lens; $1518.00 with 50mm f/2. M4-2 Winder $360.00.
MANUFACTURER: Wild-Leitz Canada, Ltd., Midland, Canada.
IMPORTER: E. Leitz, Rockleigh, NJ 07647.
PHYSICAL DIMENSIONS: 5⅝ in. wide, 3 in. high, 3 in. deep.
WEIGHT: 1 lb. 9¾ oz.

No doubt about it . . . the M Leica is a living legend. The all-mechanical, non-automatic M4-2 attests to the soundness and functionality of the basic M rangefinder design dating back to 1954. The current camera, now made almost by hand in Canada, adds a conveniently angled rewind crank and auto-indexing bright line frames in the finder for four focal lengths ranging from 35 to 135mm. Big news, though, is the M4-2 Winder which provides nearly silent automatic film advance up to 1.4 fps.

Of course, even such a bastion of conservatism as Leitz has managed to sneak a few changes into their resurrected M4, but you really have to look for them. For example, if you examine the back of the camera, you'll notice that a new film-type reminder device graces the hinged back section. Unlike the reminder dials on most other cameras, this one neither turns nor slides. To "set" it, you draw an arrow to your film speed and record the film type you've loaded, using a pen or pencil! The circle surrounded by the digits is a metallic, easily erasable "note pad." The other revision, a more major one, is even more difficult to find. Remove the baseplate and next to the film-loading diagram is a little, round, slotted key. This connects to a "one-shot-at-a-time" motor winder unit that has got to be one of the quietest on any camera. The only feature that M4 fanciers are likely to miss is the self-timer, which has been removed on this latest model. However, compact-flash users now have a hot shoe in addition to the usual PC contacts.

In a way, the discussion of minor additions and deletions is really beside the point, for Leica lovers (and numerous professional photographers) are sure to be delighted with this camera precisely because it has changed so little. Film winding and focusing are as silky smooth as ever. The shutter-release button still sets the standard for smoothness and predictability, and the camera is still the quietest focal-plane shutter camera in existence. Combine this undeniable mechanical excellence with the brightest, contrastiest, clearest viewfinder of any rangefinder camera, and add a line of superlative optics and a huge list of beautifully-made accessories and perhaps you can appreciate why experienced photographers will pay a premium price for this camera and stand in line for delivery.

We examined the finish and operation of the M4-2 in minute detail to see if it lived up to our high expectations. The verdict: The camera's renowned fit, feel, finish and smoothness are as good as ever. Physically, the latest 50mm f/2 Summicron lens drew mixed reviews—its lack of a right-handed focusing tab made things easier for those used to shooting with SLRs, but we found the lightly-knurled focusing ring too slippery. As you can see, it's quite a hard camera to criticize.

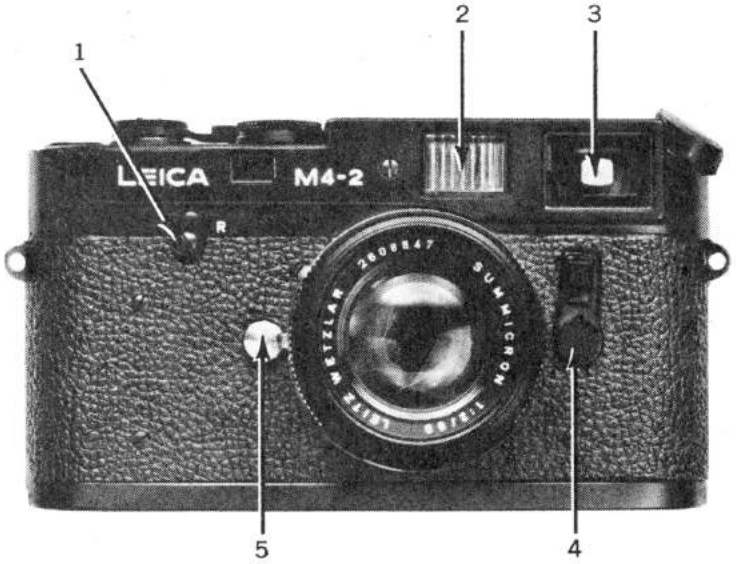

1. Rewind switch. **2.** Viewfinder frameline illumination window. **3.** Viewfinder. **4.** Manual finder-frame selector. **5.** Lens-release lock. **6.** Rewind crank. **7.** Hot shoe. **8.** Frame counter.

Olympus XA

TYPE: 35mm rangefinder camera.
LENS: Non-interchangeable 35mm f/2.8 F. Zuiko, apertures to f/22, focusing to 2.8 ft., does not accept front-mounted accessories.
SHUTTER: Electronically-controlled, between-lens leaf with finder-indicated speeds 1-1/500 sec., auto-exposure range down to 10 sec., X sync.
VIEWING: Combined optical range/viewfinder with Albada-type bright frame finder, parallax-compensation marks.
OTHER FEATURES: Aperture-preferred (you set aperture, camera chooses shutter speed) exposure automation via two 1.5-volt, silver-oxide battery-powered CdS cells behind cylindrical window above lens for films ASA 25-800; +1.5-stop backlight compensation control; audible and LED battery check and self-timer indicator; built-in sliding protective cover shields lens and finder and locks shutter; separate built-in rangefinder window cover; specially mounted, compatible A11 Electronic Flash, powered by single alkaline AA cell, provides autoflash for ASA 100 and 400 films plus manual mode for outdoor fill flash and automatically sets camera to 1/30 sec. at f/4 at autoflash settings.
PRICE: $233 with A11 flash unit.
MANUFACTURER: Olympus Optical Co., Ltd., Tokyo, Japan
IMPORTER: Olympus Corp., Woodbury, NY 11797
PHYSICAL DIMENSIONS: 104mm wide, 64.5mm high, 40mm deep (4.1 x 2.5 x 1.6 in.)
WEIGHT: 226g (8.0 oz.)

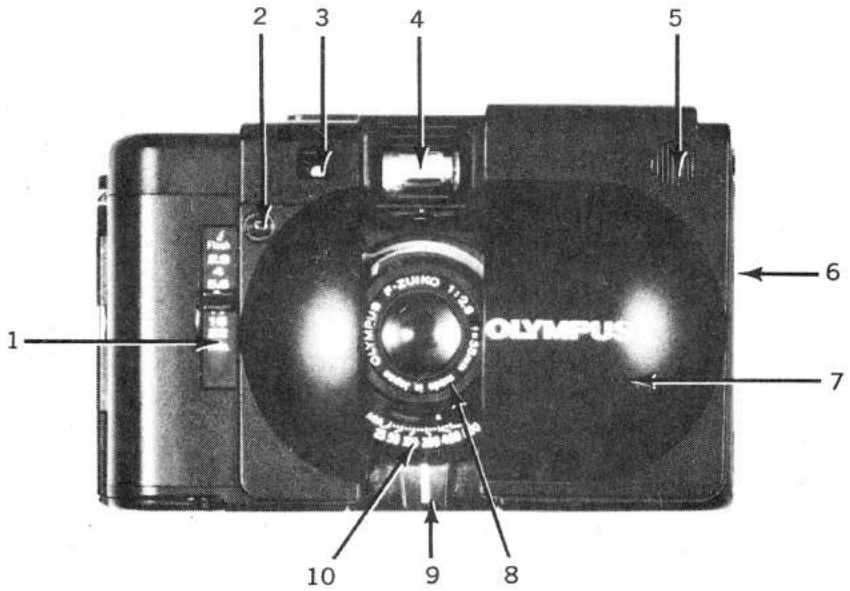

1. Aperture/flash-mode selector. **2.** Battery check/self-timer LED. **3.** Rangefinder window. **4.** Viewfinder window. **5.** Grip for protective cover. **6.** Flash-mounting post. **7.** Sliding dust cover. **8.** Lens. **9.** Focusing tab. **10.** ASA index. **11.** Frame counter. **12.** Knurled film-advance wheel. **13.** Electromagnetic shutter release. **14.** Battery-check/self-timer beeper. **15.** Folded rewind crank.

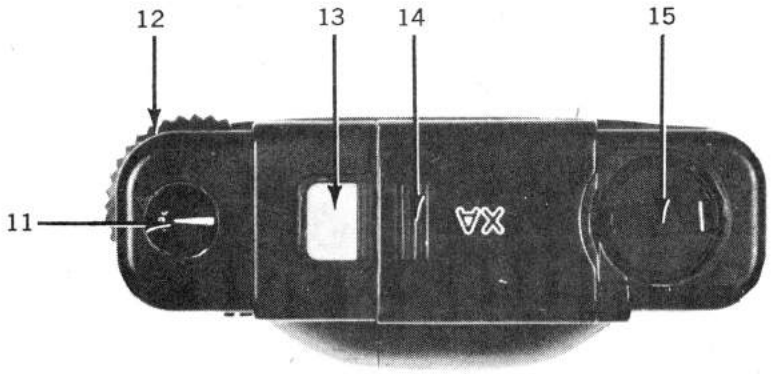

Olympus has joined the pocket 35mm fray with the new XA, which sports a host of incredible features not to be found in any other pocketable or full-sized 35mm camera. Perhaps the most amazing thing about the Olympus XA is that it does not fold and its lens does not collapse. The non-collapsible 35mm f/2.8 Zuiko lens uses an optical construction that is unique. This six-element, five-group optic is best described as a reversed retrofocus wide-angle lens which has been modified to shorten its overall length (approximately 31mm from front element to film plane) compared to its focal length in a manner resembling that of a true telephoto.

As you might expect, the XA's rangefinder is none too conventional either. With a base length of just over ⅝ in., it's one of the shortest-based rangefinders ever built into a full-frame 35mm; and it focuses over its full range by moving a knurled tab below the lens and film-speed index back and forth almost exactly ½ in.!

To open the XA's back, you close the cover fully, pull up on the rewind knob, and the back swings open to the right. Inside you'll find a well finished plastic interior with a hefty, spring-loaded metal back-lock catch, and a multi-slotted take-up spool on the right, just below the knurled thumb-operated film-advance wheel. Atop the XA are a small but legible self-zeroing film counter on the right; a squarish orange shutter release toward the middle, which incorporates a microswitch for a soft, vibrationless release; and, almost in the middle, in a striated "finger grip" section just above the viewfinder is a miniscule "speaker" that emits a not-too-loud but nevertheless piercing squeal for battery-check and self-timer indication purposes.

With the XA's tiny, integrated A11 electronic flash in place, the XA will still fit comfortably in virtually any trouser or jacket pocket. It takes but one AA cell to power it and provides over 100 flashes with 5-10 sec. recycling, plus full exposure automation and manual "full power" control.

In the final analysis, the Olympus XA is a successful camera design because it is geared to the needs of serious amateurs, who demand such features as rangefinder focusing and backlight compensation; yet it is still automatic enough to provide sharp, well-exposed photos in the hands of a tyro. The achievement of this unprecedented degree of sophistication in so light, pocketable and superbly integrated a package is certainly noteworthy.

Asahi Pentax 6x7

TYPE: 2¼ x 2¾ (6 x 7cm) eye-level single-lens reflex.
LENS: Interchangeable bayonet-mount 105mm f/2.4 Super-Multi-Coated Takumar with stops to f/22, focusing to 3½ ft.
SHUTTER: Electronically-controlled rubberized cloth focal plane with speeds from 1 to 1/1000 sec. plus B, provision for T, FP and X sync.
VIEWING: Interchangeable eye-level pentaprism with microprism, fine-focusing collar, full-focusing screen, dealer-interchangeable screens.
OTHER FEATURES: Battery check, mirror-reset button, provision for 120 and 220 film and accessory through-lens CdS metering prism, depth-of-field preview, mirror lock.
PRICE: $1,024.50.
MANUFACTURER: Asahi Optical Co., Ltd., Tokyo, Japan.
IMPORTER: Pentax Corp., Englewood, CO 80110.
PHYSICAL DIMENSIONS: 7⅛ in. wide, 5⅞ in. high, 6⅜ in. deep.
WEIGHT: 5 lb. 5 oz.

All the hoopla regarding Pentax's recent introduction of a down-scaled 35mm-style SLR—in the form of the Asahi Pentax Auto 110—shouldn't obscure the fact that Pentax also offers an up-scale version of same, the ideal-format (2¼ x 2¾ in.) Pentax 6 x 7. It combines desirable 35mm SLR features like eye-level prism viewing and a rapid-wind film-advance/shutter-cocking lever (9) with the advantages of 120/220 medium-format roll film.

In its latest form, the Pentax 6x7 has added such refinements as a mirror lockup (7) which must be activated after each exposure and a low-battery-voltage signal. For a camera this size, its balance can only be described as superb. It would be hard to improve the Pentax's ability when hand held in poor lighting conditions. The accessory CdS-metering prism finder (illustrated) couples with the shutter-speed dial (10) and indicates the light reading via a match-needle system. You select the shutter speed first and adjust the lens aperture to line up the needle in the finder. Amazingly, the meter prism is no bigger or heavier than a conventional prism. The optical system delivers a life-size 1:1 viewing image. The Pentax's bright fine-lined Fresnel focusing screen with central microprism surrounded by a fine-focusing doughnut was equal to the task of accurate focusing on a wide range of subjects.

Do not expect the view through the prism finder to equal in brightness that of a 35mm SLR. It doesn't, but it's very usable and clear. We found the surrounding wide fine-focusing collar to be extremely efficient and easy to use—as was the entire outer picture area. If you wear eyeglasses, you should have no trouble seeing almost the entire area of the finder screen.

The 6 x 7's single-stroke advance lever (9) is modeled in shape on the Pentax's 35mm SLR models. The shutter release (3) is well-placed and operated smoothly during field tests.

Though the Pentax has a large instant-return mirror, its action is well damped and the camera as a result is quite steady, unlike many 2¼ SLRs, which are virtually unusable, hand-held, below 1/125 sec. Shutter noise was at the obviously audible level, typical of most 2¼ SLRs. Resolution tests prove the Pentax's film plane flatness is superior to most 2¼ SLRs we've tested.

The Pentax 6x7 shutter is an electronically controlled, cloth focal plane unit which get its power from an Eveready 544 silver-oxide battery. It proved to be exceptionally accurate over its entire range.

To keep the size down, the Pentax engineers have opted for a pentaprism which covers only 85 percent of the picture area. Should you demand to see 100 percent of the image, you can always press the two little buttons (4) on either side of the pentaprism, lift it out, and substitute a waist-level finder. All its 12 lenses, including the macro lens and telephoto lenses up to the 1000mm f/7 Reflex-Takumar, feature a 1/6-turn, internal, three-lug bayonet mounting and a beautiful black finish.

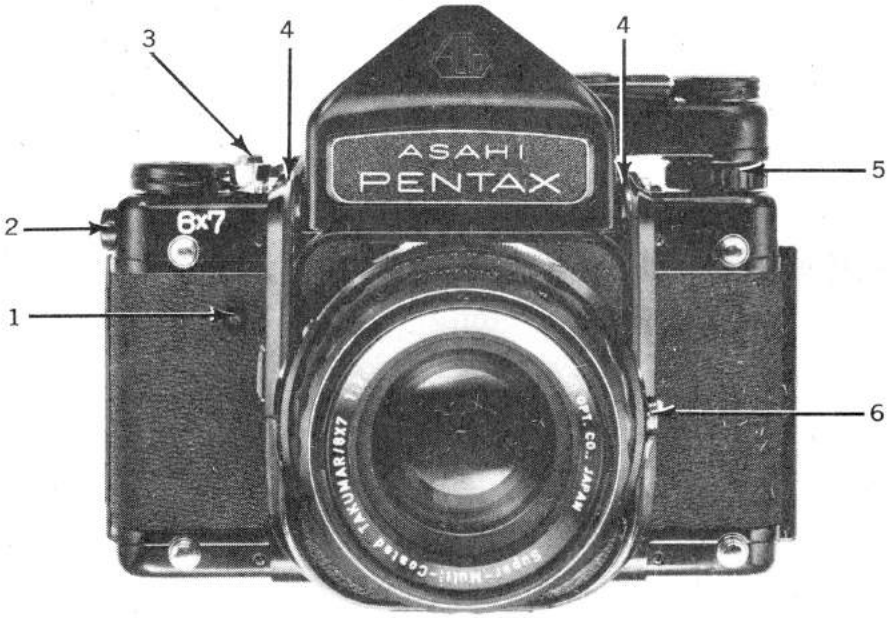

1. Emergency mirror-reset button used when battery voltage is low. **2.** 120/220 format frame-counter control switch. **3.** Shutter-release button. **4.** Interchangeable viewfinder prism housing release buttons. **5.** Shutter-speed dial. **6.** Lens release lock. **7.** Standard mirror lockup switch. **8.** Shutter-release button locking switch. **9.** Wind lever. **10.** Shutter-speed dial, for use with accessory match-needle metering prism.

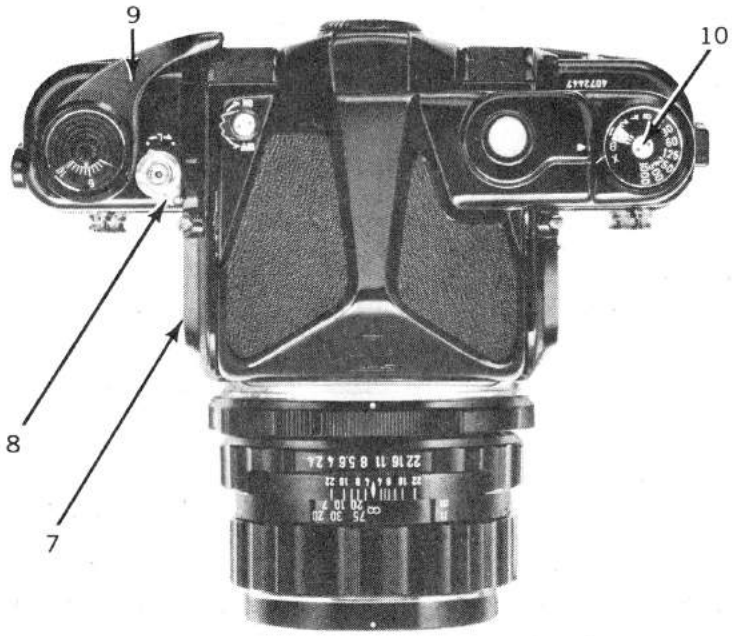

Bronica ETR S

TYPE: 1⅝ x 2¼ single-lens reflex.
LENS: 75mm f/2.8 Zenzanon MC in interchangeable bayonet mount, stops to f/22, focusing to 2 ft.
SHUTTER: Electronically-controlled Seiko No. 0 in all lenses, with speeds of 8 to 1/500 sec. plus T, X sync at all speeds, FP to 1/125 sec.
VIEWING: Interchangeable waist-level, prism, rotating and eye-level sport finders. Interchangeable standard (central split-image, microprism, fine-focusing collar) focusing screens.
OTHER FEATURES: Accepts interchangeable film backs for 120, 220 roll film, Polaroid packs, interchangeable AE-II aperture-preferred prism finder, rapid-wind grip, motor drive.
PRICE: $1,407 with 75mm f/2.8 Zenzanon, waist-level finder, 120 film back; AE-II finder $645.
MANUFACTURER: Zenza Bronica Industries, Inc., Tokyo, Japan.
IMPORTER: Ehrenreich Photo-Optical Industries, Inc., Woodbury, NY 11797.
PHYSICAL DIMENSIONS: 4⅜ in. wide, 5⅛ in. high, 6 in. deep.
WEIGHT: 3 lb. 7 oz.

1. Locking body release. **2.** Bayonet release. **3.** PC sync terminal. **4.** Finder switch. **5.** Release lock selector switch. **6.** Multi-exposure lever. **7.** Removable film advance crank. **8.** AE Finder Auto/Manual switch. **9.** Removable film back. **10.** Crank for magazine loading. **11.** Mechanical/electrical connections for film advance accessories. **12.** ASA setting, exposure compensator. **13.** Universal shutter speed dial. **14.** Cable release socket. **15.** Magazine release. **16.** Dark slide. **17.** Battery check. **18.** Double-acting magazine latch.

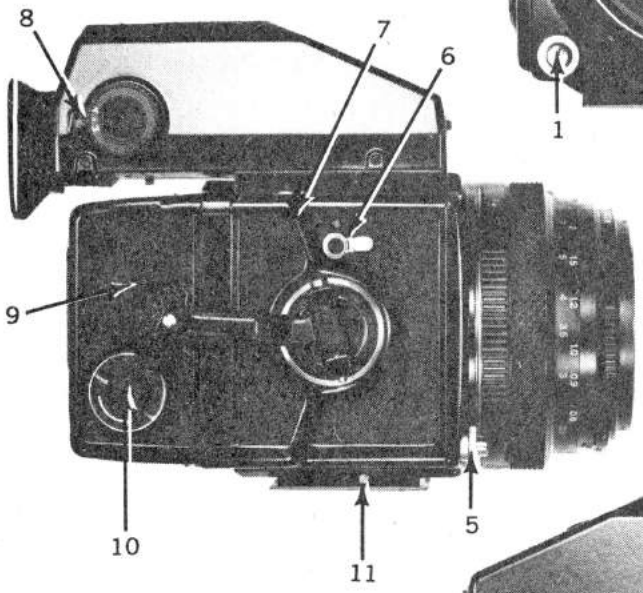

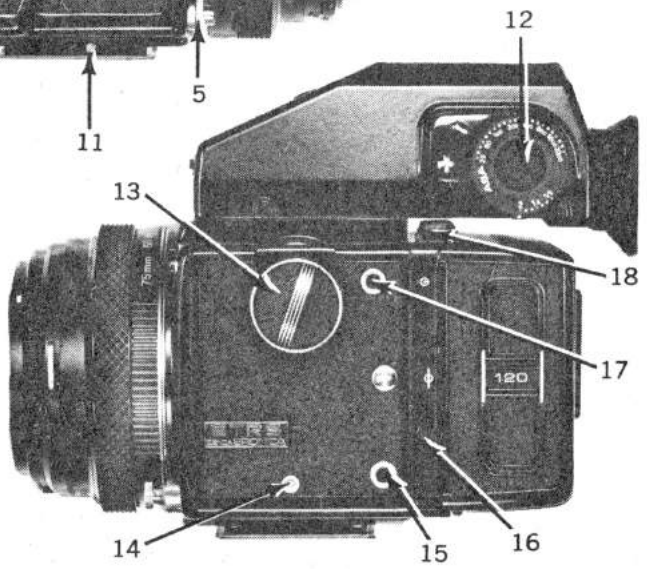

Today's Bronica ETR S reflects the steady development of a very well thought out basic camera. Since 1976, when we first tested it, the ETR's modular concept has proven to be both convenient and unusually flexible. The basic body unit with its integral mounted shutter speed control has been extended with an add-on motor drive, 70mm long roll and Polaroid backs, an auto-exposure AE-II finder for through-the-lens metering, and a 70-140mm f/4.5 Schneider Variogon zoom lens. Silicon blue cells provide aperture-preferred metering, setting the lens' Seiko shutter steplessly between 1/500 and 8 sec.

Slide the AE-II finder on, set your ASA film speed (25-3200) and press body release (1) (gently) or LED display button (4) to see the automatically-chosen shutter speed in finder. Combination battery check and shutter/open LED indicator is now located in the finder. The Bronica ETR S can almost simulate a 35mm camera in terms of handling when you add the vertical Speed Grip, a right-handed, lateral two-stroke film-winder lever accessory with hot shoe on top. You can now add on a modular motor drive ($550) instead. This accessory can remotely advance film and trip the shutter, and return the mirror at up to 1 fps. It slides onto the tripod plate.

Camera body improvements this year include gold-plated electrical contacts at the ground-glass for AE operation, redesigned neck strap rings, 3-position switch on the shutter release for normal use; lock for motor or handgrip use, and off.

Each lens (they presently range from a 40mm f/4 Zenzanon to a 250mm f/5.6 Zenzanon) incorporates its own five-bladed electronically-timed Seiko No. 0 shutter providing speeds of 8 to 1/500 sec. plus T on battery power in addition to a single mechanically-timed speed of 1/500.

The actual electromagnetic shutter-timing circuitry is located in the body itself, while the springs that physically move the blades are contained within the bayonet-mount lens units. Shutter speed, maximum lens aperture and shooting aperture information are transferred from the body to the lens by means of six gold-plated contacts on the back of each lens that mate with corresponding spring-contacts inboard of the top part of the ETR S's four-claw bayonet lens-mounting flange or matched extension tubes, bellows, etc.

At the back end is an interchangeable film magazine. Slide the dark slide in (matching the dot-in-circle symbol) and then press button (15) to swing the magazine up and off the camera body. Open the back and you are greeted by a particularly easy to load film insert. There are separate 120 and 220 backs, a 70mm magazine and a Polaroid adapter.

The Bronica ETR S is a significant and highly successful camera that succeeds amazingly well in its design objectives—providing 35mm handling ease and speed in a medium-format package.

Hasselblad 2000FC

TYPE: 2¼ x 2¼ single-lens reflex.
LENS: 80mm f/2.8 multicoated Zeiss Planar in interchangeable bayonet mount, stops to f/22, focusing to 2 ft.
SHUTTER: Electronically-timed horizontal metal focal plane with speeds from 1 to 1/2000 sec. plus B, X sync. at 1/90 sec., provision for multiple exposures.
VIEWING: Interchangeable waist-level finder with full-focusing Fresnel screen.
OTHER FEATURES: Automatic diaphragm, rapid-return mirror, 2¼ x 2¼, 2¼ x 1⅝, 1⅝ x 1⅝-in. format interchangeable roll-film backs, depth-of-field preview, rapid-wind crank, interchangeable finders and viewing screens.
PRICE: $3,090 with lens. Black, $30 extra.
MANUFACTURER: Victor Hasselblad, Ab, Göteborg, Sweden.
IMPORTER: Braun North America, Inc., Cambridge, MA 02142.
PHYSICAL DIMENSIONS: 4⅜ in wide, 4¼ in. high, 7 in. deep.
WEIGHT: 3 lb. 5 oz.

Perhaps the most remarkable "feature" of the Hasselblad 2000FC isn't really a feature at all but the manner in which this advanced machine, with electronically-controlled shutter, has been integrated into the existing system. Not only is the 2000 FC virtually identical in form, size and basic operation to the well-proven 500 C/M, it is also fully compatible in terms of lenses and film backs. In short, it is a camera that extends the range of this superb system without obsoleting anything. Indeed, the Hasselblad 500 C/M continues in production as the mainstay of the line.

Technically, the 2000 FC's super-thin corrugated metal focal-plane shutter is undoubtedly the most interesting item, as suggested by its "2000" designation. The "FC" part stands for "focal-plane or Compur shutter" denoting the camera's ability to make full use of lenses designed for the 500 C/M or shutterless optics.

In addition, the 2000FC incorporates an instant-return mirror with non-return and lockup options, and a button permitting multiple exposures. Owners can use the present Hasselblad leaf-shutter lenses and bypass the focal plane shutter, thus providing full electronic flash sync to 1/500 sec., or they can bypass the Compur leaf shutter by leaving it on B and use the electronically-controlled focal-plane shutter.

The shutter-speed ring is now at the rear of the mounted lens, next to the aperture-set ring. Both can be locked together for LVS operation, but the lock is far more convenient than previously. The new shutter provides X sync at 1/90 sec., and prevents an electronic flash unit from firing it a faster speed is set. It's also possible to set in-between shutter speeds.

Is simply getting a four-times-faster high speed of 1/2000 sec. the only reason for the new 2000FC Hasselblad? Certainly not. By eliminating the need for the leaf shutter in each lens, and providing a focal-plane shutter, Hasselblad is now able to offer another F (for focal plane) Zeiss lens line with larger maximum apertures and closer focusing, previously made impossible by the constrictions of the leaf shutter. For instance, the standard 80mm f/2.8 Zeiss Planar standard lens focuses to 2 ft. instead of the leaf-shutter 80's 3 ft.

Even more impressive is the full f/stop aperture gain of the 50mm f/2.8 Distagon F which focuses to 1 ft. vs. the 50mm f/4 Distagon's 19 in. Likewise the 150mm f/2.8 Sonnar focuses to 4.6 ft. vs. the 150mm f/4 Sonnar C's 5-ft. minimum distance. The new superfast 110mm f/2 Planar F focuses to 2.6 ft. All F-series lenses feature rubberized-grid focusing rings at the front in place of the hard-to-grasp rear rings on most leaf-shutter lenses. Obviously this is just the start of the possible shutterless lenses that can now be fitted.

Perhaps initially overlooked, a key to what Hasselblad plans for the future can be seen in the removable battery compartment housing the 6-volt battery, powering the electronically-timed shutter. The compartment has six contacts and can possibly provide full exposure automation.

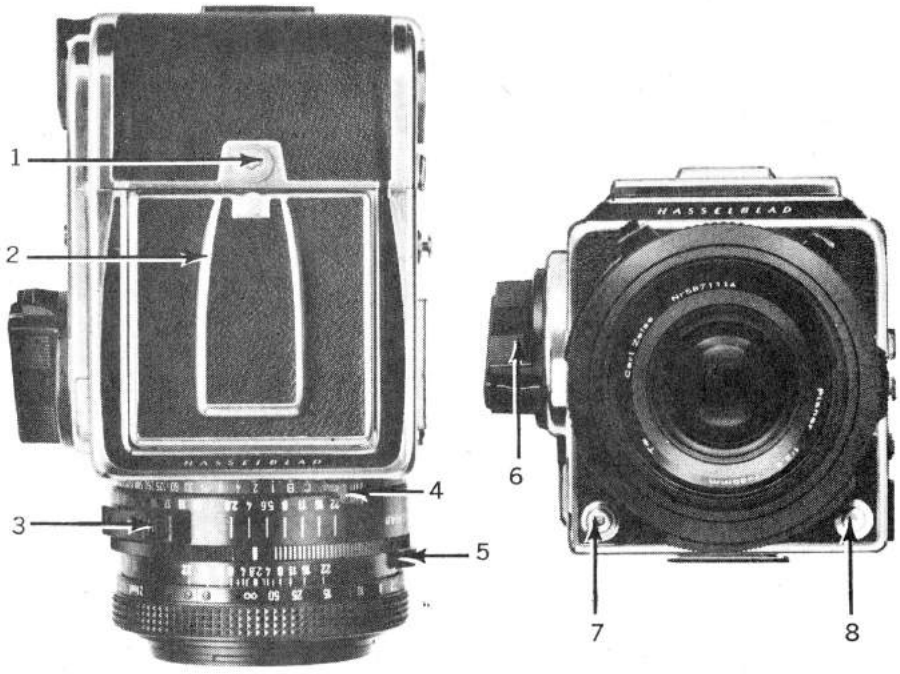

1. Film magazine lock. **2.** Removable waist-level finder. **3.** Aperture/shutter speed coupler. **4.** Shutter-speed ring tab. **5.** Depth-of-field preview. **6.** Film-advance crank. **7.** Shutter release. **8.** Lens-release lock. **9.** Film-positioning/removal crank. **10.** Exposure counter. **11.** Film-advance/shutter cocking verification windows. **12.** Neckstrap lug.

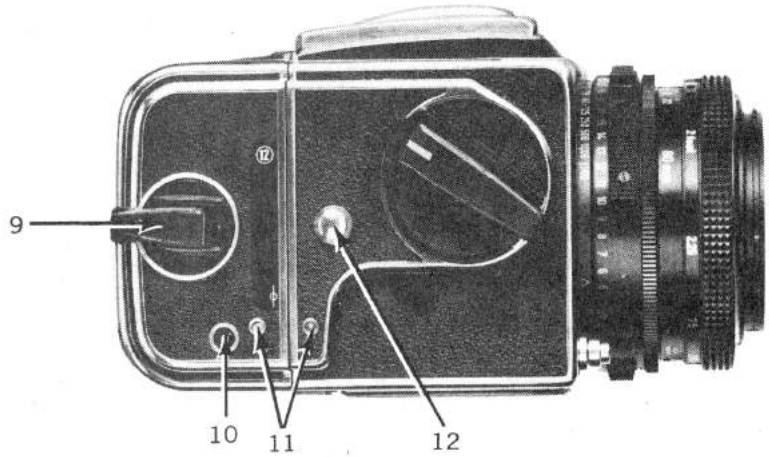

Mamiya M645 1000S

TYPE: 1⅝ x 2¼ single-lens reflex.
LENS: 80mm f/1.9 Mamiya Sekor C in interchangeable bayonet mount, stops to f/22, focusing to 2¼ ft.
SHUTTER: Vertical-travel electronically-controlled cloth focal plane with speeds from 8 to 1/1000 sec. plus B, X sync at 60 sec., FP at all speeds, special setting for coupling through-lens meter prism.
VIEWING: Interchangeable prism or waist-level finder with 45° split-image screen, fine-focusing collar and full-focusing Fresnel viewfinder screen.
OTHER FEATURES: Multiple-exposure provision, mirror lockup, shutter-release buttons at front and top, X-sync hot shoe, film-identification clip, shutter-lock button, rapid-wind crank, depth-of-field preview lever, delayed-shutter-release lever, accepts 120 or 220 film.
PRICE: $835 with 80mm f/2.8; $960 with 80mm f/1.9.
MANUFACTURER: Mamiya Camera Co., Tokyo, Japan.
IMPORTER: Bell & Howell/Mamiya Co., Chicago, IL 60645.
PHYSICAL DIMENSIONS: 4 in. wide, 5 in. high, 6½ in. deep. WEIGHT: 3 lb. 8 oz.

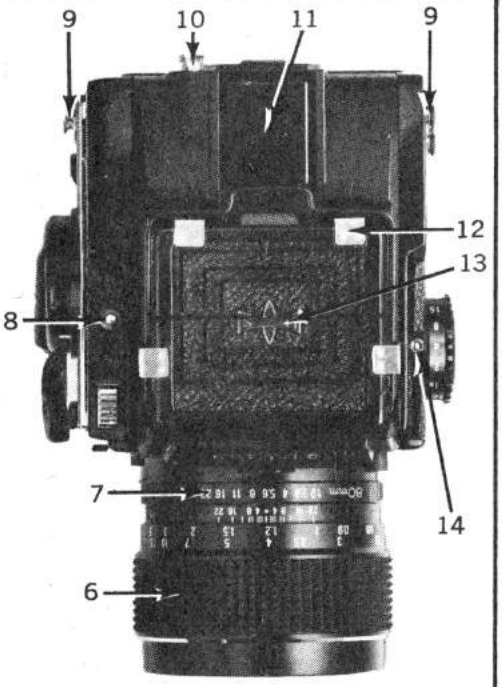

1. Shutter release (one of two, see #5). **2.** Meter-coupling lug for meter prisms. **3.** Shutter-speed dial has central lock. **4.** Lens-release button. Second shutter release is threaded for cable. **6.** Focusing ring. **7.** Aperture ring. **8.** Battery-check button lights diode at #14. **9.** Lugs for neck strap. **10.** Finder-lock button needs a twist and a press. **11.** Sportsfinder rear sight (collapsed) of waist level finder. **12.** Sportsfinder front sight (collapsed). **13.** Pop-up hood of waist-level finder. **14.** Battery-check light. **15.** Mirror-lockup lever. **16.** Rapid-rewind lever. **17.** Multiple-exposure lever lets shutter cock without winding film. **18.** Frame Counter. **19.** Depth-of-field lever.

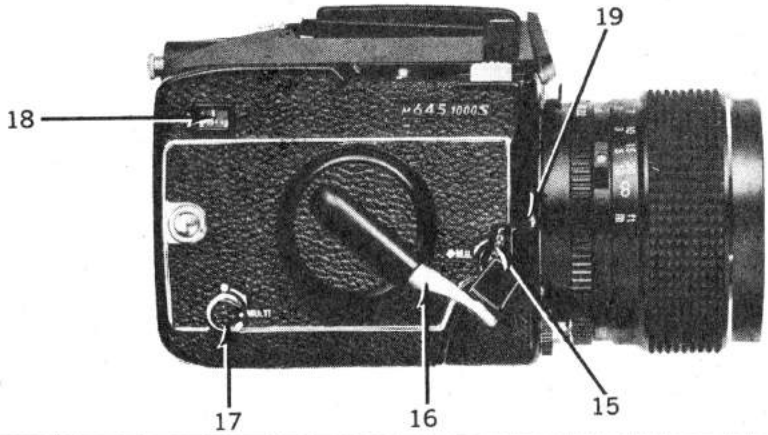

Mamiya's version of the rectangular-format, Hasselblad-shaped roll-film SLR reaches its zenith with the 1000S, the most fully featured of a line that includes the M645 and M645J. Like its siblings, the 1000S has a focal-plane shutter and film inserts instead of interchangeable magazines, but its electronic shutter tops the scales at 1/1,000 sec. Pop on the AE prism for aperture-preferred automation and the "power drive" grip for the 1-fps motorized film advance and you've got something very closely resembling the capabilities of a late-model 35mm SLR, only with the advantages of roll-film size.

The M645 has two shutter-release buttons. For horizontal shooting, you can use either of them; for vertical shooting, you must hold the camera in your left hand and press the top release. There's also a 5 to 10-sec. shutter-trip delay lever on the front.

The film-wind crank advances the film one frame per complete revolution and automatically stops exactly where it started. While the winding force required is not noticeably less than that of similar cameras, its action is definitely smoother than most.

Shutter shock is present in moderate amounts but it's evident that most of the shock comes as the mirror returns to the viewing position after the exposure has already been made. The best proof of this was uniformly sharp pictures we shot hand-held, at speeds as slow as 1/30 sec. The shutter-speed dial now locks so it can't be accidently moved.

Turning to the Mamiya shutter, this electronically-timed unit doesn't retain the second shutter curtain by means of an electromagnet, but utilizes normal mechancial means for this purpose. Therefore, unlike other electronically-controlled shutters, its power consumption is very low, claiming way over one year of battery life, even with professional use.

In regard to the shutter's accuracy, we recorded no more than 4 percent error throughout the entire range from 8 to 1/250 sec. on our Kyoritsu tester. Even at the 1/500-sec. setting, the maximum error went up to only 13 percent.

The PDM (photo-diode meter) prism finder is also available. Fast-acting silicon cells cover EV 0 to EV 18 (ASA 100) and show the correct exposure by green LED with red LEDs for over or underexposures.

The M645 has 15 interchangeable lenses at the moment. They range from a 24mm f/4 fisheye to a 500mm f/5.6 and all have automatic diaphragms. An 80mm f/4 macro, a 105-210mm f/4.5 zoom and a 145mm f/4 soft-focus lens also have been added to the line.

Accessories like the automatic bellows and slide copier, revolving tripod adapter for easier vertical shooting and waist-level finder are available along with the newer AE prism finder and power drive. For electronic flash shooting, there's also a 70mm f/2.8 leaf-shutter lens that syncs at all shutter speeds.

Mamiya RB67 Pro-S

TYPE: 2¼ x 2¾ single-lens reflex.
LENS: Interchangeable 127mm f/3.8 Mamiya-Sekor C with stops to f/32 and focusing to 17 in.
SHUTTER: Seiko No. 1 between-lens leaf in each interchangeable lens, with speeds from 1 to 1/400 sec. plus T. MX Sync.
VIEWING: Interchangeable waist-level finder with interchangeable focusing screens available.
OTHER FEATURES: Automatic diaphragm; single-stroke film advance; depth-of-field scale and preview lever; double exposure prevention; revolving Graflok back accepts standard 2¼ x 3¼-in. Graphic film holders plus 120, 220 and 70mm Mamiya RB magazines, Polaroid packs and Mamiya Press roll-film magazines with special adapters.
PRICE: With 120 roll-film Mamiya back: $1385 with 90mm f/3.8 C lens; $1440 with 127mm f/3.8 C lens.
MANUFACTURER: Mamiya Camera Co., Tokyo, Japan.
IMPORTER: Bell & Howell/Mamiya Co., Chicago, IL 60645.
PHYSICAL DIMENSIONS: 4¼ in. wide, 5½ in. high, 8⅝ in. deep.
WEIGHT: 4 lb. 14 oz.

The most recent addition to the Pro-S? A power drive that advances film one frame per second to dramatically expand the potential of this fine camera. Six AA alkaline batteries, housed in a battery pack at bottom, provide the power that makes this a sequencing camera.

Bellows and a revolving back are augmented by automatic and safety provisions to provide a formidable shooting package.

Mirror-mechanism tensioning and manual shutter cocking are taken care of by a single stroke of the side-mounted lever. While film winding is a separate operation, there's a double-exposure prevention mechanism connected to the shutter. Because of the revolving back and bellows extension, these mechanisms are amazingly complex. Only Mamiya has ventured as far in this area.

You *can* switch all of the interchangeable parts between previous RB67s and the Pro-S, but the double-exposure prevention is lost when you interchange film magazines.

In transforming the RB67 into the Pro-S, Mamiya's prime objective was incorporating a built-in double-exposure prevention mechanism. Nevertheless, the entire camera was practically redesigned from the ground up. The double-exposure prevention mechanism works this way: As you wind the film to the next frame, the red warning mark in the enlarged frame counter disappears and the shutter release is automatically freed for firing. The shutter can be cocked either before or after you advance the film. As soon as you fire the shutter, the shutter locks and the filmwind lever lock is free to turn.

A multiple-exposure mechanism is incorporated in present versions of the film magazine. At the right side of the wind lever is another small lever. As you push it forward it uncovers a red dot which warns you that the camera is now set for multiple exposures. Unless you set it back manually, it remains in the multi-exposure mode.

Another important addition in the Pro-S is automatic finder-framing for horizontal and vertical shooting. First there's a pair of solid red lines which delineate the picture area with the film holder in the horizontal position. As you turn the revolving back, these red lines disappear and dashed blue vertical lines remain to indicate the vertical picture field. The finder hood opens completely as you lift the top plate, and when you position the magnifier, the hood becomes light-tight for low flare and a very clear image on the screen.

To lock the focusing mechanism, you just turn the locking lever (16) to the upright position. One final external difference in the Pro-S is its accessory shoe on the left side of the camera body (15.). All other RB67 features have been retained.

Several new lenses have been added to the Sekor family making a total of 12.

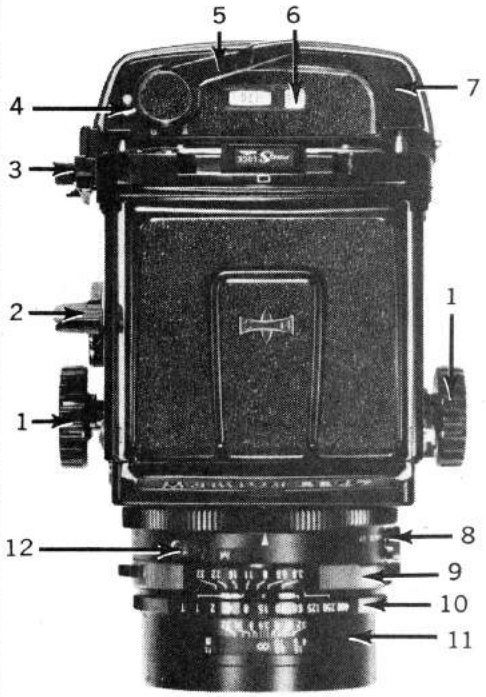

1. Focusing knobs. **2.** Shutter-cocking lever. **3.** Dark slide. **4.** Multiple exposure switch. **5.** Single-stroke film advance lever. **6.** Frame counter window. **7.** Interchangeable film magazine revolving Graflock back. **8.** Mirror-release operating knob. **9.** Aperture ring. **10.** Shutter-speed ring. **11.** Depth-of-field scale. **12.** MX sync PC flash terminal. **13.** Shutter-release button. **14.** Waist-level finder hood. **15.** Accessory shoe. **16.** Focusing-knob lock lever. **17.** Interchangeable lens breech-lock collar. **18.** Film-magazine back lock lever. **19.** Film identification clip. **20.** Neckstrap lugs. **21.** Multi-focal-length depth-of-field and focusing scale.

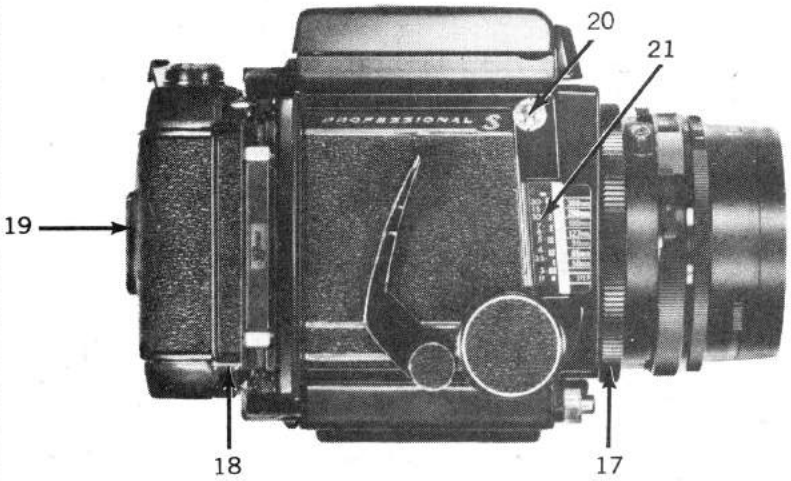

Rolleiflex SLX

TYPE: 2¼ x 2¼ single-lens reflex.
LENS: 80mm f/2.8 Planar in interchangeable bayonet mount, apertures to f/22, focusing to 3 ft.
SHUTTER: Electronically-controlled interlens leaf (in each lens) with speeds of 30-1/500 sec. plus B, X sync at all speeds.
VIEWING: Interchangeable waist-level finder with built-in sports finder, microprism collar, full-focusing Fresnel outer area with grid.
OTHER FEATURES: Three silicon cells behind spectral-response-compensating, semi-silvered, coated mirror read lower center-weighted area instantaneously at working aperture, provide fully-automatic exposure control (you set the shutter speed, camera determines aperture), with over, underexposure warning LEDs, beyond-meter-range warning system adjacent to finder area, low-battery-power LED above, full manual aperture-control operation, automatic compensation for extraneous light entering finder. ASA settings 25-6400. Combined depth-of-field preview/exposure-hold control is coupled to camera selected aperture readout on lens, mode selector permits single-frame operation with auto film advance or continuous motor-drive operation for sequences up to 1.6 fps, removable back, interchangeable film-holder frames accept 120 or 220 film; automatic, electronic, 12/24 exposure-frame counter with automatic first frame positioning and auto film wind after last exposure, built-in electric socket on camera body accepts electronic cable release/mirror lock, future accessories, all circuitry powered by slide-in nicad battery.
PRICE: $2,500 with 80mm f/2.8 lens.
MANUFACTURER: Rollei-Werke Franke & Heidecke, Braunschweig, West Germany.
IMPORTER: Rollei of America, Inc., Littleton, CO 90121.
PHYSICAL DIMENSIONS: 4 in. wide, 5⅜ in. high, 5 5/16 in. deep.
WEIGHT: 4 lb. 2 oz.

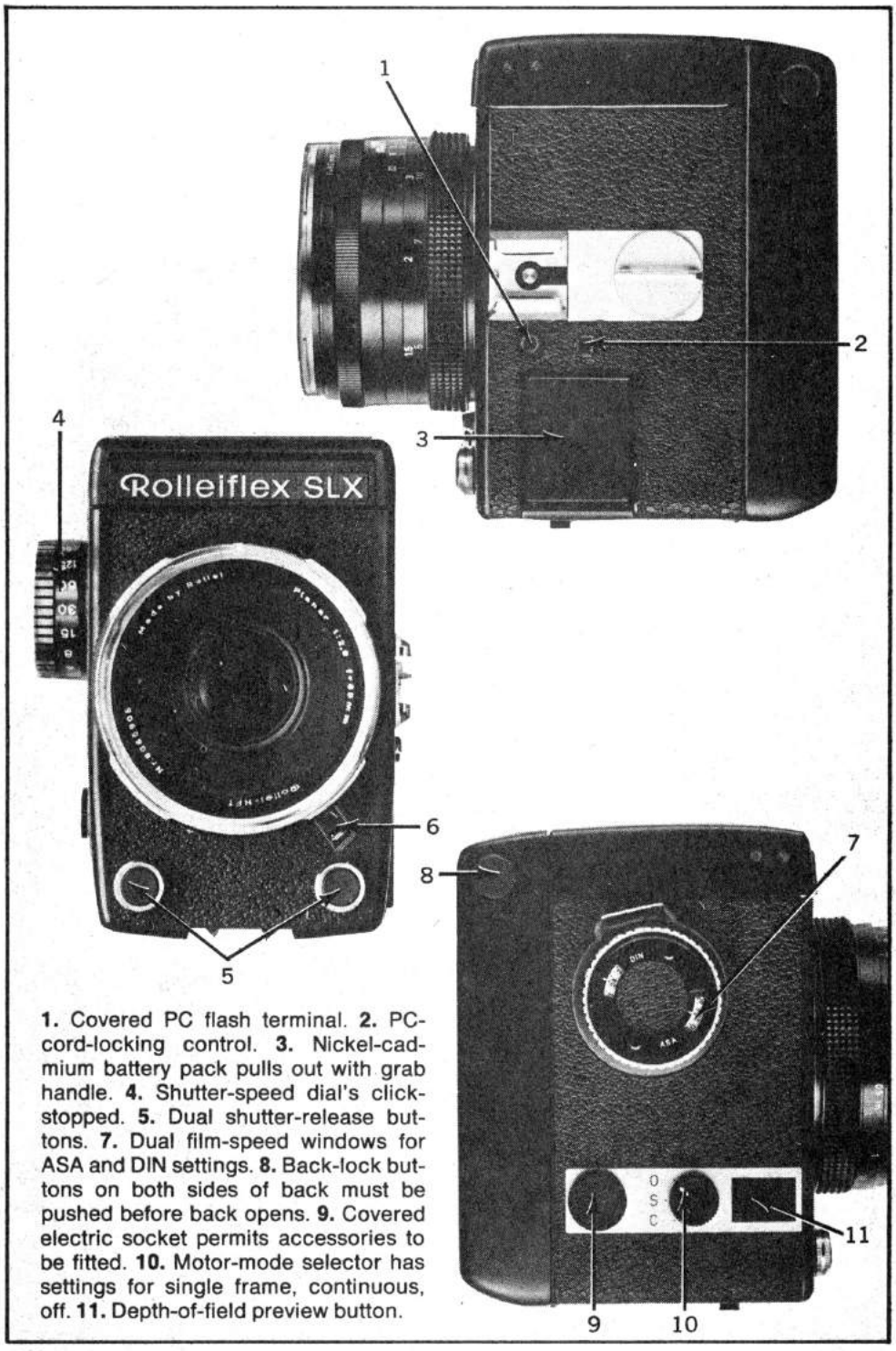

1. Covered PC flash terminal. **2.** PC-cord-locking control. **3.** Nickel-cadmium battery pack pulls out with grab handle. **4.** Shutter-speed dial's click-stopped. **5.** Dual shutter-release buttons. **7.** Dual film-speed windows for ASA and DIN settings. **8.** Back-lock buttons on both sides of back must be pushed before back opens. **9.** Covered electric socket permits accessories to be fitted. **10.** Motor-mode selector has settings for single frame, continuous, off. **11.** Depth-of-field preview button.

In the face of stiff competition from the likes of Hasselblad (2000FC) and Bronica (EC-TL II) the Rolleiflex SLX retains its title as the world's most advanced, all-electronic roll film SLR in production.

The SLX is a leaf-shutter, 6 x 6 cm (2¼ square), single-lens reflex camera with a hinged back that accepts plastic film inserts. Once you've said that, you've just about exhausted the "ordinary" features. For example, the SLX features an electronically-controlled auto exposure system of the shutter-priority type (i.e., you set the shutter speed, the camera selects the aperture), but it is unique in that it *executes* as well as calculates the exposure by electronic means. Press one of the dual shutter buttons and the first frame is automatically positioned. Press it again and you can shoot either single frames or sequences up to 1.6 frames per sec.—the film is automatically advanced electrically as soon as the shutter fires in either mode. And, as you might expect, the large, knurled shutter-speed dial on the camera's righthand side (in shooting position) controls a wide range of electronically-timed speeds (to 30 sec.).

Easy loading is another SLX advantage. Its framelike removable plastic film holders are literally a snap to insert, and they accept either 120 or 220 film. To load them, just orient the roll properly in the keyed end of the film chamber with the tongue of the paper leader pointing black side up toward the empty take-up spool, pull the red tab on the other end of the film chamber to lift the spring-loaded film-retaining pin, and snap the roll in place.

It's clear that the SLX is very advanced, very state-of-the-art, but in the end if there's any real justification for the SLX's existence (or for its hefty price) it is its handling. Charge up the battery, load up a few extra film holders and go out and take some pictures. Whether you shoot single frames or rapid sequences, you can't help but be enchanted with the camera's operation. Set it on "A," press the shutter button and—"clunk-shutter-whoosh" you're ready to shoot the next frame. In short the SLX is in a class by itself.

Mamiya C 330 f

TYPE: 2¼ x 2¼ twin-lens reflex.
LENS: 80mm f/2.8 Mamiya-Sekor, stops to f/32, focusing to 7 in.
SHUTTER: Seikosha-S between-lens, with speeds 1 to 1/500 sec. plus B, MX sync.
VIEWING: Interchangeable waist-level finder with interchangeable full-focusing screen.
OTHER FEATURES: Combined film-advance and shutter-cocking crank, provision for intentional double exposures, semi-automatic film loading, 120-220 back, auto parallax-compensation selector, focusing-knob lock.
PRICE: $700 with 80mm f/2.8 lens; body only, $435.
MANUFACTURER: Mamiya Camera Co., Tokyo, Japan.
IMPORTER: Bell & Howell/Mamiya Camera Co., Chicago, IL 60635.
PHYSICAL DIMENSIONS: 4⅞ in. wide, 6¾ in. high, 4⅝ in. deep.
WEIGHT: 3 lb. 14½ oz.

The Mamiya C330f might be likened to the jeep of medium-format cameras. When it was originally introduced in 1957, it provided an inexpensive and practical alternative to the 2¼ single-lens reflex. Now, in its seventh model, it still provides a fast-working, rugged, versatile tool for pros and non-pros alike.

This camera combines the versatility of an interchangeable-lens camera with the small size and automatic operation of twin-lens reflexes. Features include rack-and-pinion focusing, interchangeable finders and camera backs, combined shutter cocking and film advance, intentional double exposures, auto-resetting frame counter, focusing-knob lock.

Only minor price fluctuations have occurred since our last report. Nothing needed to be changed—the camera satisfied its users. The C330f is extraordinarily rugged, providing a sturdy base for close-up and long-lens work with compact lens units. Parallax correction and exposure factor corrections are indicated at a glance by a moving red pointer visible in the finder.

There's even a choice of shutter releases—one on the right side (10) where it's always been, and one at the front of the base (11). Should you purchase the accessory pistol grip, there's also the option of trigger release.

The film-advance crank (14) geared into the lens' shutter-cocking mechanism (13) requires only one forward stroke. There's no back swing as with the C33. When you turn the crank you activate a coupling that depresses the shutter-cocking lever. While double-exposure prevention is thus built into the camera, you can bypass it if you choose. You turn a tiny dial (15) on the right side of the camera from the roll-film setting to the sheet or multi-exposure setting. You can then cock the shutter manually and fire it without advancing the film. The switch remains at the multi-exposure mode until reset to the roll-film setting.

The automatic parallax-compensation- and effective-aperture indicators work for all lenses except the 65mm wide-angle. To set the camera for automatic parallax indication you set a small dial (8) on the left side of the camera to the focal length you wish to use. As you rack out the bellows, an inch-long horizontal indicator needle appears at the top of the viewing screen. Anything above the needle is out of the picture area. All you need do to prevent chopping off a head, or omitting an important area, is raise the camera until the top of the subject you wish to include is under the indicator after you focus. The indicator also points to a scale of exposure-increase factors on the left side of the groundglass.

The depth-of-field scale is now in the form of a hexagonal-shaped rod on the left of the camera, covering all lenses from the 55mm f/4.5 to the 250mm f/6.3 lens.

The regular finder can be replaced by the Porrofinder, with or without CdS metering, or a prism finder, giving you as much as 2.5X magnification. The great advantage with these finders, of course, is unreversed eye-level viewing rather than the standard reversed waist-level view.

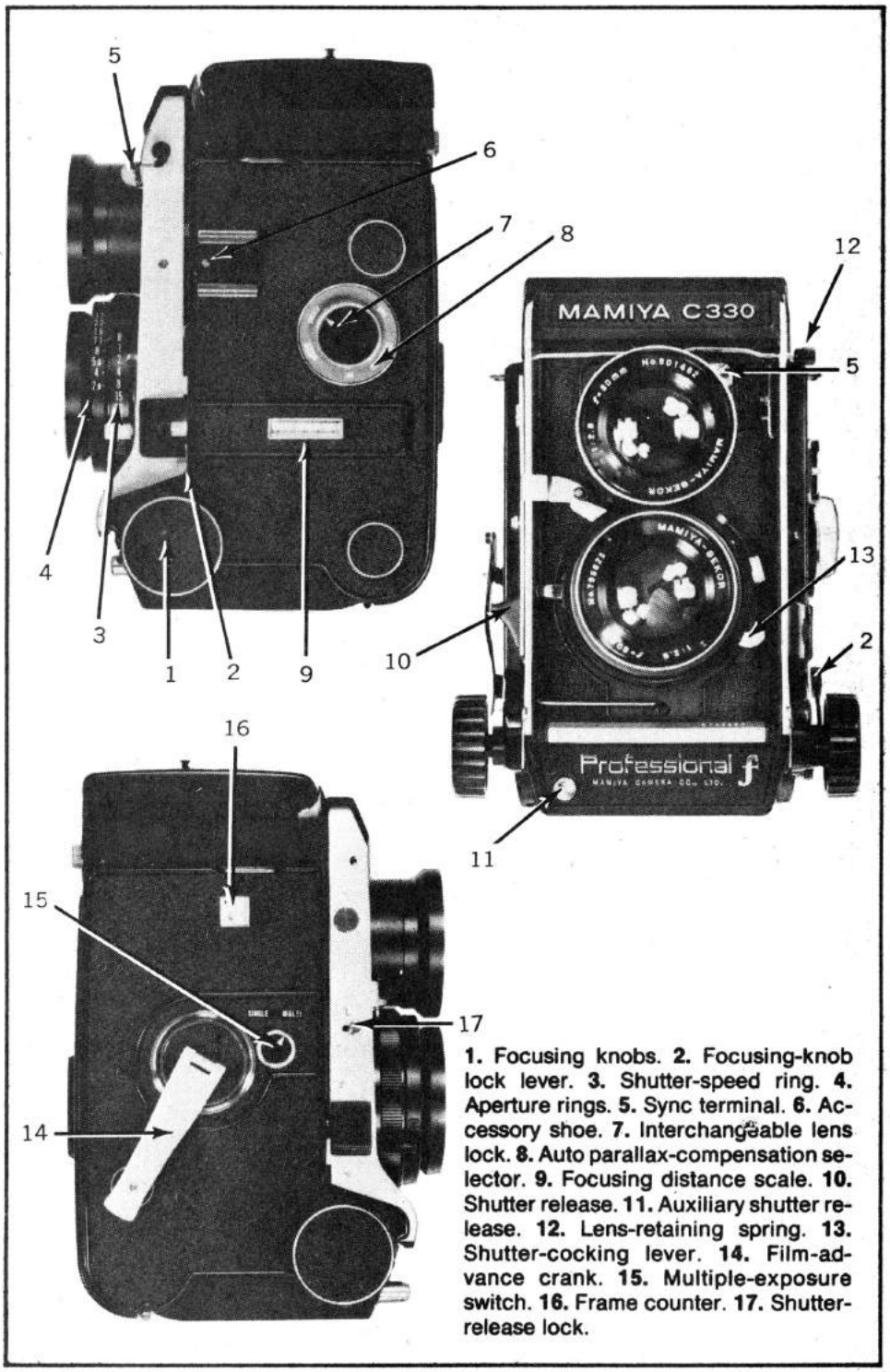

1. Focusing knobs. 2. Focusing-knob lock lever. 3. Shutter-speed ring. 4. Aperture rings. 5. Sync terminal. 6. Accessory shoe. 7. Interchangeable lens lock. 8. Auto parallax-compensation selector. 9. Focusing distance scale. 10. Shutter release. 11. Auxiliary shutter release. 12. Lens-retaining spring. 13. Shutter-cocking lever. 14. Film-advance crank. 15. Multiple-exposure switch. 16. Frame counter. 17. Shutter-release lock.

Yashica Mat 124G

TYPE: 2¼ x 2¼ twin-lens reflex.
LENS: 80mm f/3.5 Yashinon taking and f/2.8 viewing, stops to f/32, focus to 3.3 ft.
SHUTTER: Copal SV between-lens with speeds from 1 to 1/500 sec. plus B, MX sync, self-timer.
VIEWING: Waist-level with central fine-focusing spot, full-focusing screen, auxiliary eye-level sports finder.
OTHER FEATURES: Combined shutter-cock/film-advance crank, semi-automatic film loading with auto frame counter, double-exposure prevention, built-in CdS exposure meter (ASA 25 to 400) coupled to lens and shutter control wheels, accepts 120 and 220 roll film.
PRICE: $240.
MANUFACTURER: Yashica Co., Ltd., Tokyo, Japan.
IMPORTER: Yashica, Inc., Paramus, NJ 07652.
PHYSICAL DIMENSIONS: 4 in. wide, 5¾ in. high, 4 in. deep.
WEIGHT: 2 lb. 5½ oz.

Reports of the death of the 2¼ twin-lens reflex are slightly exaggerated. True, there aren't too many of these boxy 120s around, but the interest in this big square format is as strong as ever. During the TLR's heyday, Yashica offered fans a choice of over a half dozen models. Today there's only one. It just happens to be the best of the lot. The Mat-124G bears some seemingly primitive features, such as waist-level viewing, in outward appearance, but make no mistake—it has all the current advantages possible on a camera of its type. Most useful of these is a built-in CdS exposure meter (5) that gives the camera conventional match-needle exposure control.

This meter first appeared on Yashica's Model 12 camera, was repeated on the Model 24 (for the long 220 roll film) and carried forward to the present 124 which incorporates both the 120 and 220 roll-film sizes. Naturally, a few modifications were necessary to accommodate both film lengths, and these modifications were in turn modified on the G model. Externally, the G is noted for its sleek black finish; internally, the big move has been a simplification of the 120-220 switching procedure.

To change roll-film sizes all you do is press and slide the film pressure plate about ¼ in. Through a cutout in the plate you see either "12 ex." in green or "24 ex." in red. Positioning the plate automatically sets the frame counter (20) and wind mechanism. The only time you may have trouble is when lining up the film. In loading, you wind the film until the arrow on the film's backing is aligned with a mark inside.

The 220 mark (red, following the color scheme) is in almost the same spot on the camera's back as the mark in most regular 120 cameras. But its 120 (green) mark is on the underside of the camera's inside, quite close to the film spool itself. Thus it comes up pretty fast when you are winding 120 film. You have to slow down your winding. Keep your eye on the bottom, not the back.

Up on the nameplate, top front, is the telltale eye that reveals the CdS cell exposure meter (5). Such an exposure system means there's a battery located in a small compartment (17) on the bottom left side, and a circuit that should be turned off when not in use to prevent drain on the battery. The Mat-124G prevents this drain very neatly as the circuit is on only when the hood (16) is raised to viewing position.

Along the top front are the meter controls. At the right end a small window (26) contains the ASA scale—from 25 to 400—which you set via a small knurled wheel (21) on the side. Here you have to be a little careful not to move the wheel accidentally and dislodge your ASA setting. However, since you are always looking down at the pointer window (23) next to the ASA window (26), you can check it periodically.

The longer window (23), smack in the middle, has a thin red pointer and a thickish green open-ended pointer; both are clearly visible against a copper-colored background. The shutter-speed setting wheel (3) on the right controls the red pointer, and the aperture wheel (8) controls the green.

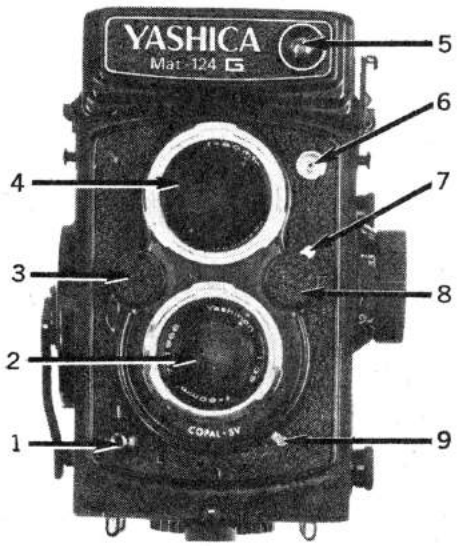

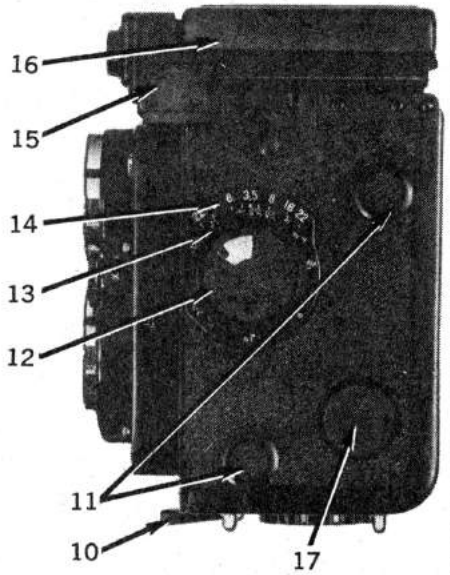

1. Shutter release. **2.** Taking lens. **3.** Shutter-speed selector wheel. **4.** Viewing lens. **5.** CdS cell window. **6.** Flash-sync terminal. **7.** Flash-sync selector. **8.** Aperture-selector wheel. **9.** Self-timer. **10.** Back lock. **11.** Film-spool holder knobs. **12.** Focusing knob. **13.** Footage scale. **14.** Depth-of-field scale. **15.** Accessory shoe. **16.** Focusing hood. **17.** Battery compartment. **18.** Film-advance/shutter-cocking crank. **19.** 120/220 indicator. **20.** Frame counter. **21.** Film-speed setting wheel. **22.** Sports-finder. **23.** Meter window. **24.** Aperture indicator. **25.** Shutter-speed indicator. **26.** Film-speed scale.

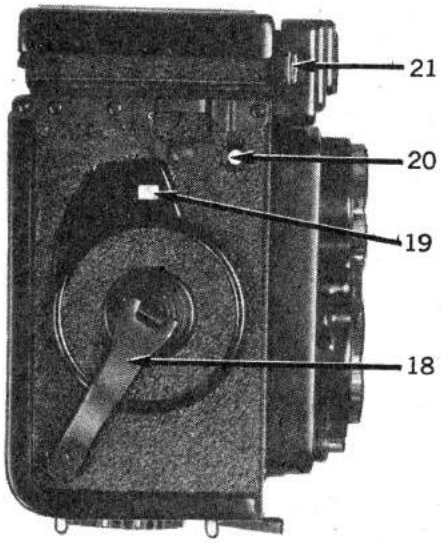

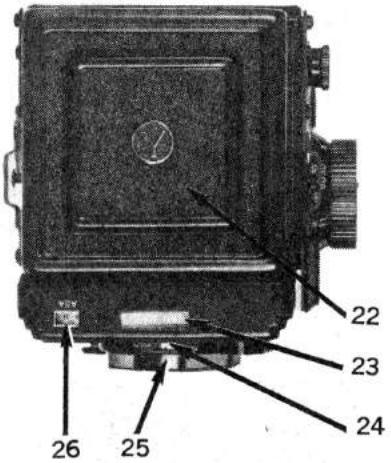

Mamiya Universal

TYPE: 2¼ x 2¼, 2¼ x 3¼, 6 x 9cm and 6 x 7cm cut film, film pack, Polaroid and roll-film camera.
LENS: 100mm f/3.5 or f/2.8, stops to f/32, focusing to 3½ ft.
SHUTTER: Seikosha S with speeds from 1 to 1/500 sec., plus B, MX sync.
VIEWING: Eye-level view-rangefinder with separate bright-frame fields for 100, 150 and 250mm lenses.
OTHER FEATURES: Graflok back, two back-extending spacers for close-ups, auto parallax adjustment for 100, 150, 250mm lenses, detachable hand grip, interchangeable roll film, cut film, film pack, Polaroid back, sports finders.
PRICE: $945 with 100mm f/3.5 lens, back adapter and 6 x 7cm or 6 x 9cm 120/220 roll-film holder.
MANUFACTURER: Mamiya Camera Co., Tokyo, Japan.
IMPORTER: Bell & Howell/Mamiya Co., Chicago, IL 60645.
PHYSICAL DIMENSIONS: With roll-film holder and grip: 7 13/16 in. wide, 6⅞ in. high, 5⅝ in. deep (front of lens to camera back).
WEIGHT: 3 lb. 15½ oz. (without back adapter).

The continuing (and, in fact, increasing) interest in medium-format cameras among quality-conscious non-professionals is a real testimony to their value as a working tool. The Mamiya Universal persists almost unchanged as a versatile and high quality multi-format press-type camera.

Eight lenses covering the range from super-wide-angle (50mm) to 250mm, roll-film holders in three formats (accepting both 120 and 220 film), four focusing units, sheet film holders, pack adapter, and Polaroid back round out the package.

The Polaroid pack back ($150) is invaluable for confirming results in tricky situations as well as providing quick pix.

Other features originally introduced into the Mamiya 23, remain extant. However, instead of the bayonet-mount-lock buttons to secure the lens—as on older models—the Universal has a massive, knurled bayonet-locking ring, (10) around the entire lens mount. It locks lenses in place quickly, accommodating easily the rather large 250mm f/5, which requires extra support.

The eyepiece is sufficiently large to afford comfortable viewing. The viewfinder, with its clearly etched markings for 100, 150 and 250mm lenses, is bright, with a good-sized dot in the center for double-image rangefinder focusing. Changing viewing angles is simply a matter of pushing a slide at the rear of the camera, and the focal-length frame you want shows in a tiny window at the back of the camera and is also projected in the finder. In addition, the finder has auto parallax compensation.

The standard lens for the Universal is a 100mm f/3.5 or f/2.8, as against the 90mm f/3.5 for older machines such as the Deluxe or Standard. The newest in the line, however, is the 50mm f/6.3. This complements the existing 65mm f/6.3, 75mm f/5.6, 127mm f/4.7, 150mm f/5.6 and 250mm f/5 lenses.

The latter, by the way, cannot be used on the Standard or Deluxe. While it's physically possible to mount the lens, there's some doubt that the camera mount is strong enough to take the weight. In addition, there are no finder masks available for the 250mm lens (which the older cameras required to change viewing angles).

A comfortable handgrip fitted with a top-mounted flash accessory shoe and trigger-controlled cable release is adjustable and removable. Shutters may be tripped here, with the shutter-mounted trip lever, or by a separate cable release for tripod work.

Typical of press-type cameras, there's no double-exposure prevention, since film advance—on the roll-film holder—and shutter cocking are independent. Multiple-exposure fans will consider this a plus.

The long-suit of a camera like the Universal is its ability to put out large-format quality work in fast-moving, quality-oriented situations (aerial, wedding and publicity work, for example).

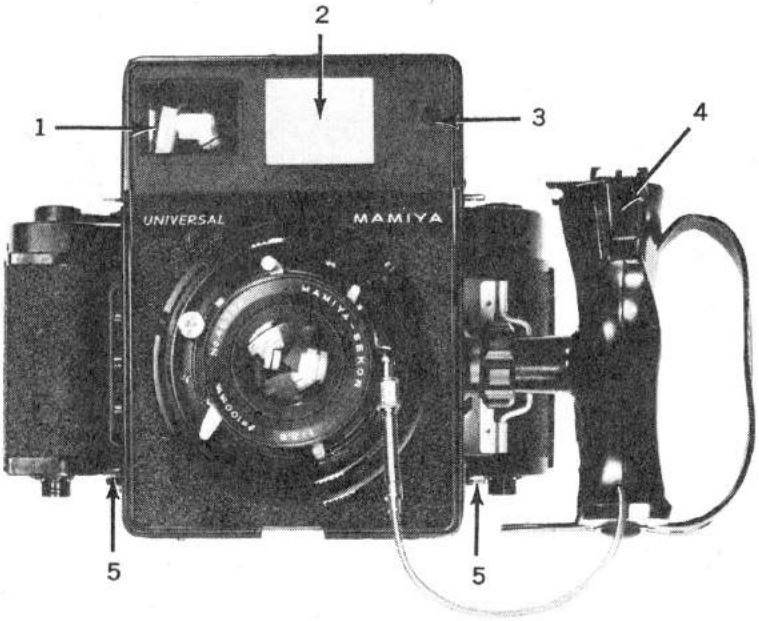

1. Viewfinder. **2.** Frame illumination window. **3.** Rangefinder window. **4.** Shutter release. **5.** Film magazine locks. **6.** Wind lever. **7.** Roll-film holder. **8.** Shutter-speed ring. **9.** Sync terminal. **10.** Breech-lock ring. **11.** Shutter-cocking lever. **12.** ASA index scale.

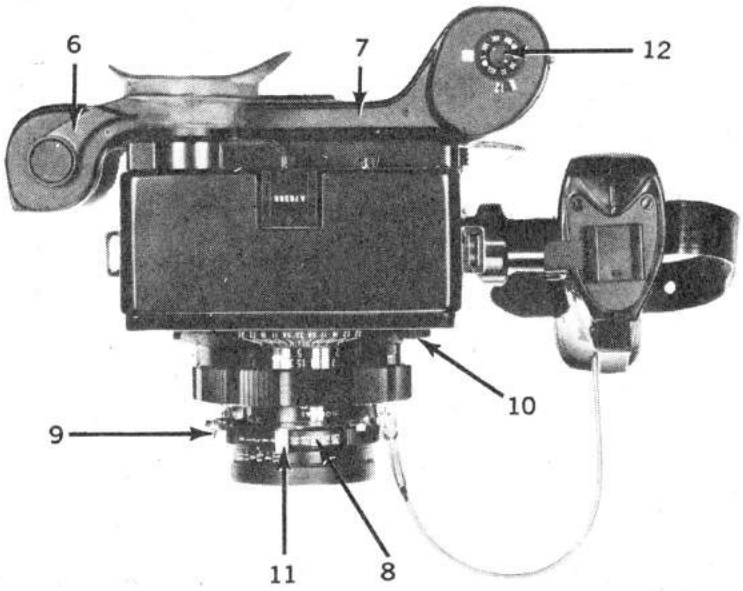

Rapid Omega 200

TYPE: 2¼ x 2¾ roll-film rangefinder.
LENS: Interchangeable 90mm f/3.5 Super Omegon with stops to f/32, focus to 3½ ft.
SHUTTER: Seikosha between-lens with speeds from 1 to 1/500 sec. plus B and MX sync in each lens.
VIEWING: Combined view/rangefinder, with bright-frame lines for 90mm lens, corner dots for 135mm lens, automatic parallax corrections.
OTHER FEATURES: Interchangeable 120 and 220 roll-film holders and magazines (Model 200 only), automatic film advance and shutter cocking, flash guide, three accessory shoes, cable-release clip, adjustable hand grip.
PRICE: $655 with 90mm f/3.5 and 120 magazine; $675 with 220 magazine.
MANUFACTURER: Not available.
IMPORTER: Berkey Marketing Inc., Woodside, NY 11377.
PHYSICAL DIMENSIONS: 8⅞ in. wide (with pistol grip), 5¼ in. high, 5 11/16 in. deep. WEIGHT: 4 lb. 13 oz.

Even amid the recent flourishing of medium-format hand cameras, the Rapid Omega 200 still embodies ruggedness and fast operation, which are top priority to many pros. Not a view camera substitute, it endures as a mainstay for professionals in situations in which versatility and maneuverability are paramount considerations. The Rapid Omega 200 has earned its reputation among professionals who require a medium-format camera which combines quick and easy focusing, a rapid film wind, and dependable interchangeability of lenses, roll holders and film magazines. It also offers full flash sync at all shutter speeds and a wide range of lenses.

The Rapid Omegas (the 100 and 200) are essentially 120/220 6 x 7 cm-format rangefinder cameras with parallax-compensating bright-frame viewfinders and 1-1/500 sec. full flash-sync shutters in each interchangeable lens. But the less expensive Rapid Omega 100 lacks the 200's fully interchangeable film magazine. Only roll holders can be interchanged on the 100.

Rapid Omega lenses have two fixed pins at the rear that locate lenses precisely. Also, 90mm and 135mm lenses have rangefinder-coupling pins that connect to the finder system through an opening in the camera body. The 58mm lens has a special optical wide-angle finder, which mounts to one of the accessory shoes.

As in all top-grade modern rangefinder cameras, the finder automatically adjusts for change in focal length and parallax. And, by the way, the Omega's projected-frame system is about the most accurate available. There are no coupling pins for wide-angle lenses since there's no bright frame finder. All Rapid Omega lenses are neatly finished in matte black with highly readable, yellow aperture numbers and white shutter-speed numbers (11).

You focus with a generous-sized knurled knob (3) on the right side of the camera body. Overall image brightness on the Rapid Omega 200 is good.

To advance film and cock the shutter on the 200, you pull out and then push in the film-advance lever (1). During actual film advance the pressure plate is withdrawn from the film plane. This approach makes film advance considerably easier than on previous designs.

The film back on the Rapid 100 is not designed to allow mid-roll film removal. The magazine locks directly onto the camera and there's no way of safely removing it short of going into a darkroom. The 200's back system actually consists of two sections locked together—a magazine and a section containing the dark slide. You can simply unlock the magazine at the end of the roll and exchange it for another roll holder. Or you can insert the dark slide and remove the entire unit—which makes it possible to change emulsions in mid-roll.

If your primary interest is in close-up, studio or scientific photography, you would not be using this camera at its highest potential. Action photography is its strongest point: The Rapid Omega 200's optimum environment is a wedding or football game.

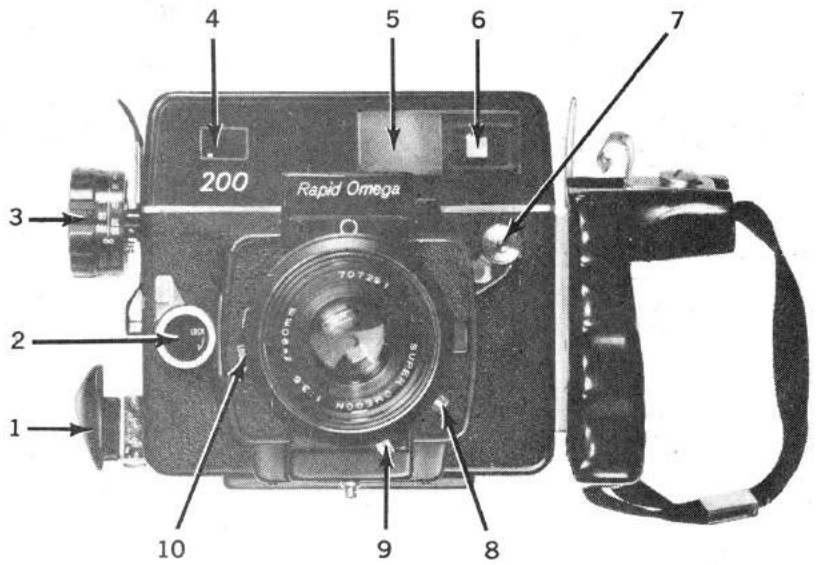

1. Film-advance/shutter-cocking lever. **2.** Film-magazine lock. **3.** Focusing knob. **4.** Rangefinder window. **5.** Frame illumination. **6.** Viewfinder. **7.** Shutter release. **8.** Sync terminal. **9.** Auxiliary shutter-cocking lever. **10.** Lens-mount lock. **11.** Shutter-speed scale. **12.** Flash synchronization guide. **13.** Dark slide. **14.** Cable-release catch.

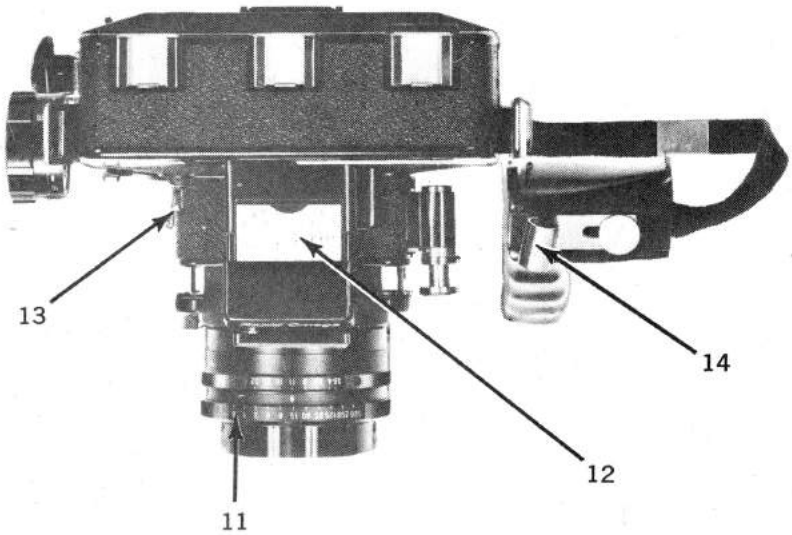

Kodak Colorburst 300

TYPE: Instant-picture camera for Kodak instant-print film pack.
LENS: 137mm f/11 with apertures of f/11 and f/16, focusing to 3½ ft.
SHUTTER: Electronically-controlled interlens leaf with speeds from 1/20-1/300 sec., provides two-aperture programmed auto exposure with lighten-darken control.
VIEWING: Optical viewfinder with bright frameline, "zooming circle" focusing device, low-light warning signal.
OTHER FEATURES: Electric motorized film advance delivers externally-developing print, recocks shutter. Built-in electronic flash atop camera covers 3½-12 ft. autoflash range with lighten/darken control covering ±⅔ stop range.
PRICE: $82.50.
MANUFACTURER: Eastman Kodak Co., Rochester, NY 14650.
PHYSICAL DIMENSIONS: 5¼ in. wide, 8¼ in. high, 3⅝ in. deep.
WEIGHT: 2 lb. 6 oz.

The 300 is the most advanced of the three models in Kodak's Colorburst series, and it has the added distinction of being the first Kodak instant-picture camera with a built-in electronic flash. The flash, which sits atop a vertically styled chassis, takes four AA cells (alkaline or nicad) and covers a range of 3½-12 ft. automatically, with recycle times claimed at 10 and 7 sec. for alkalines and nicads, respectively. Other than the flash and some redesigned body trim, the Colorburst 300 pretty much resembles the EK6—which, along with the EK4, was replaced by the current Colorburst series.

The Colorburst 300 substitutes impact-resistant plastic for the EK6's metal front panel, but its general design is as before. Prints are motor driven out through a slot on the bottom of the camera, and Kodak has opted for a battery compartment in the camera rather than in each film pack.

Kodak has also retained the unique focusing system for its instant-picture trio—it's sort of a simplified rangefinder particularly suited to rank amateurs. As you slide the focusing tab on the camera's front from side to side, a gold circle in the center of the finder field increases or decreases in size. Place a human subject's head "chin to crown" within the circle using the focusing tab, and you'll be in focus with the vast majority of subjects.

Although the Colorburst 300 is a moderately-priced camera designed to be operated by tyros, its electronic circuitry is complex and highly sophisticated. For example, the exposure is set by a silicon photosensor which also causes a red signal to appear in the viewfinder when the light level falls below f/11 at 1/20 sec. at the film's exposure index of 150. When you turn on the flash, the red warning light goes out, and the lens is automatically set to f/11 for flash exposures. A self-quenching circuit cuts the flash off when sufficient light is reflected back from the subject.

Operational similarities between Kodak's instant-picture system and Polaroid's include a 10-print film cartridge which automatically counts down the number of exposures remaining via a little window on the back of the camera, and a sliding lighten/darken control on the front. However, the Colorburst 300 has lighten/darken controls on both camera and flash, and the print images it provides measure a rectangular 2⅝ x 3 9/16 in. instead of Polaroid's 3⅛ in. square. Interestingly, both the 300 and its most direct competitor, the Polaroid Pronto, use mirrors to relay the picture image from lens to film. But since Kodak opted for a vertical cartridge, the Colorbursts have two fixed mirrors.

Although billed as an "instant picture" camera, the Colorburst 300, like its rivals, does take a while to produce a fully saturated color print outside the camera. At "normal" outdoor temperatures Kodak's system takes about 8-10 min., according to our tests. In our exhaustive field trials, we also discovered Kodak's snazzy-looking Colorburst 300 is a capable picture taker under a wide variety of indoor and outdoor shooting conditions.

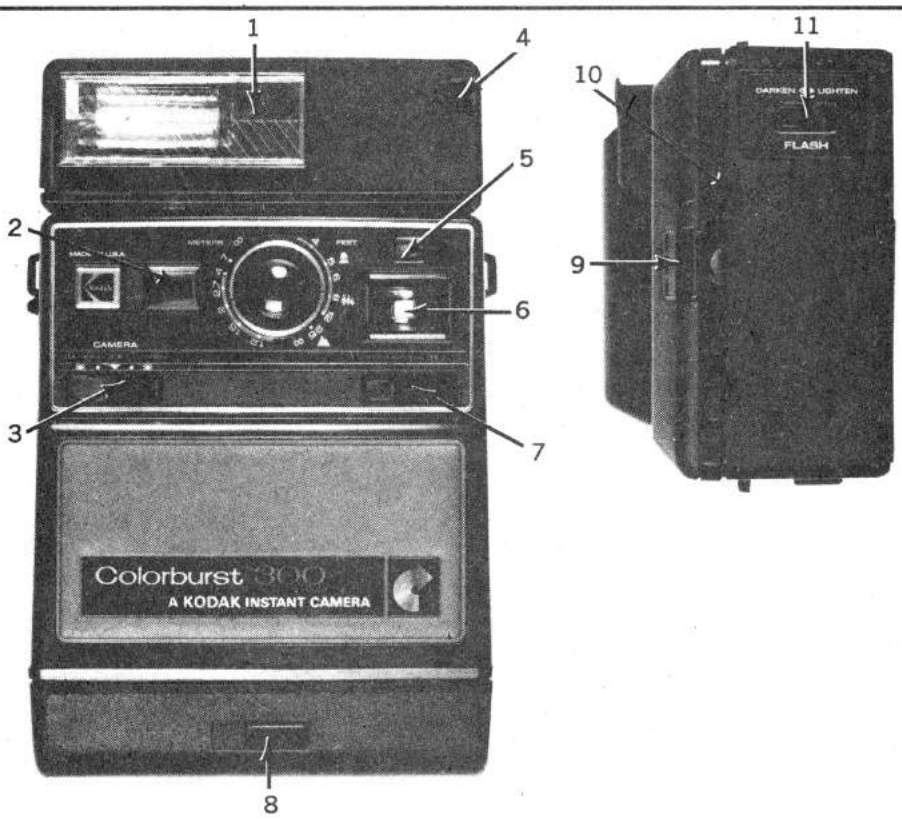

1. Reflector area of built-in electronic flash. **2.** Camera's meter window. **3.** Camera lighten/darken control. **4.** Flash sensor controls light output. **5.** Focusing-aid illuminating window. **6.** Viewfinder window. **7.** Focusing tab for distances from 3½ ft. to infinity. **8.** Cover release provides access to film chamber. **9.** Cover release for flash's battery compartment. **10.** Sliding flash-housing on-off switch. **11.** Flash's lighten/darken control. **12.** Shutter-release.

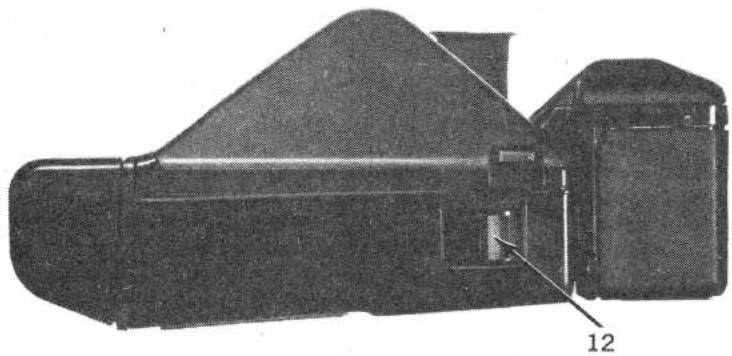

Polaroid Sonar One Step

TYPE: Polaroid Land Film Pack SLR.
LENS: 116mm f/8 with stops to f/74, focusing to 10.4 in.
SHUTTER: Electronically-controlled leaf with speeds from 14 to 1/180 sec., X sync.
VIEWING: Non-interchangeable eye-level finder with full-area manual focusing and viewing.
OTHER FEATURES: Ultrasonic echo-ranging focuses lens, motorized lens focusing drive, motorized film advance and shutter recocking, lighten/darken control, provision for remote shutter button, flash socket for 10-shot GE Flashbar, tripod socket.
PRICE: $249.95.
MANUFACTURER: Polaroid Corp., Cambridge, MA 02139.
PHYSICAL DIMENSIONS: Shut: 9x4⅛x1½ in.; OPEN: 9x4⅛x5¼ in.
WEIGHT: 1 lb. 13 oz.

Without a doubt, Polaroid has one of the most successful autofocusing systems around perched neatly atop the SX-70 One Step. Using ultrasonic echo-ranging to focus the lens, the module delivers an inaudible "chirp" out to the subject. It returns to the unit at the speed of sound while sophisticated timing circuits measure the reverberation time. At camera position, a high speed motor drives the lens in focus. Total time? 100 milliseconds.

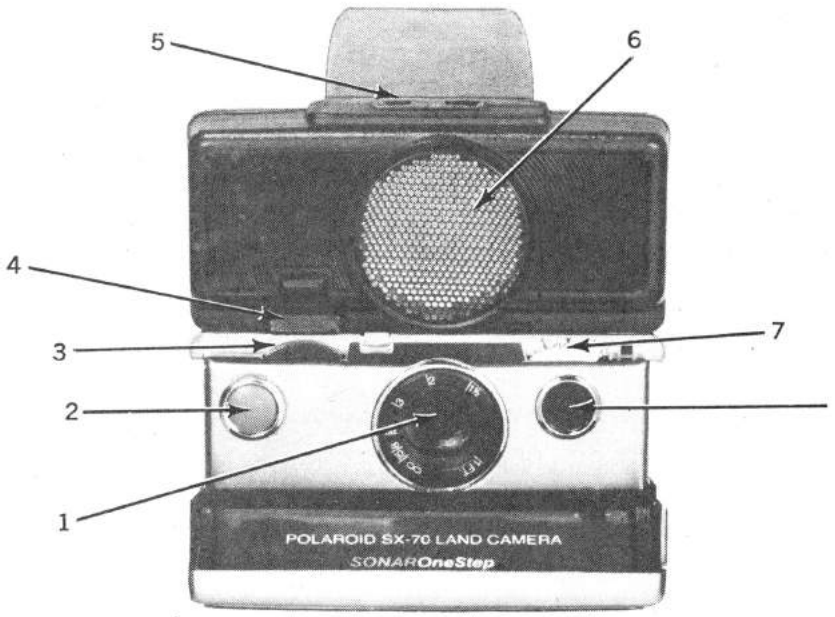

1. 116mm f/8 lens. **2.** Shutter-release button. **3.** Knurled focusing wheel. **4.** Autofocus bypass switch. **5.** Ten-shot flashbar receptacle. **6.** Receptacle for diaphragm of ultrasonic focusing system. **7.** Darken/lighten control wheel. **8.** CdS meter cell port. **9.** Collapsible reflex viewfinder eyepiece. **10.** Opening/closing support strut. **11.** Hinged film loading front and print exit slot.

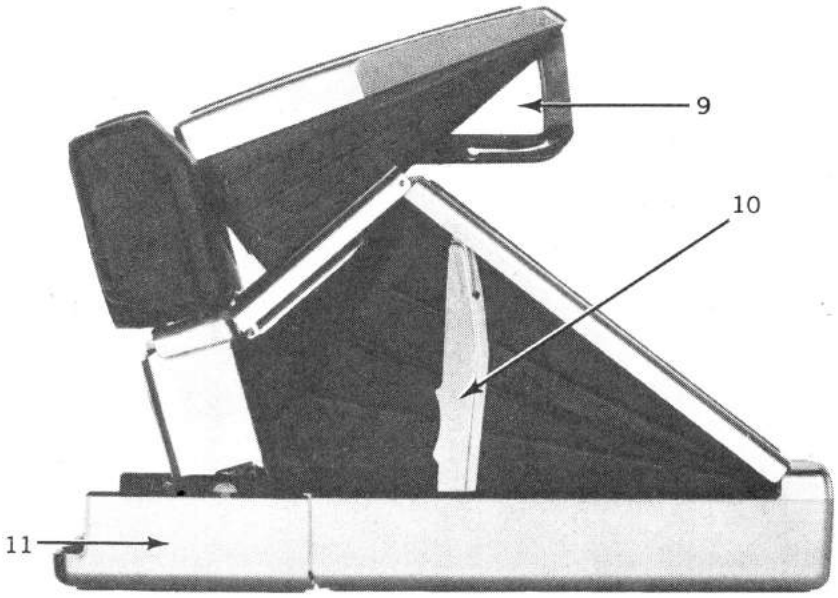

The system has been modified slightly since it was first introduced in 1978. The lens now "parks" in infinity focus. No more indistinct "blob" before focusing. Depressing the shutter button starts sounds sounding and motors whirring. Hold the button in and the focus locks, release, and it returns to infinity—you cannot follow focus on a moving subject constantly. Press again and you're in focus, press harder—you've made your picture. Focus (from a gold-plated transducer diaphragm in an 4⅛ x 1¾ in. housing in the position formerly occupied by the flashbar) is center-weighted, covering a 10° angle. Position center of interest just above the center of the field and hit the button. Don't like it? Redirect your focus point and try again. You always see what you're going to get—it's visible in the improved full-area groundglass. Depressing a rocker arm just above the focus wheel disengages the electronics in favor of manual fingertip focusing.

We found manual focusing necessary only when focusing views through windows or reflected in mirrors. The camera unerringly focuses on windows unless you lend a hand. Trying to outwit it by shooting reflections in mirrors and store windows at an angle, we found that beyond 45° the beam would bounce off and the camera would focus to infinity—which more often than not brought us to proper focus. In our judgment, the electronics are hard to beat. Taking sharply-focused flash pictures in darkened rooms may develop into the party game of the 80s.

The sound approach to distance measurement has come a long way—from bats, to submarine detection, to autofocusing instant cameras.

In case you've been wondering—the 10-shot flashbar has moved up one story and now perches atop the transducer housing, lessening the chance of pink-eyed portraits. A new version of the add-on telephoto accessory for portraitists made for the SX-70 Alpha is now available. The four-element unit clips right on and maintains the use of automatic focus.

Other details of the Sonar One-Step seem identical to the SX-70 or Alpha—its folded length has been increased 1½ in. by the autofocal module (not adaptable to older SX-70s, in case you wondered) and an internal low-light level warning LED added. Other data remains the same: 20-ft. flash range with 10-shot GE Flashbar, apertures ranging from f/8 to 74, exposures from 1/180 sec. to 14 sec.

With the new improved, faster processing SX-70 Land Film Packs, this slim large-format SLR is the fastest route we know of to a sharply-focused color print. Dr. Land has taken a giant step towards the realization of his dream, effortless imaging.

Polaroid 600 SE

TYPE: Rangefinder camera for Polaroid Land 2⅞ x 3¾ in. format film packs.
LENS: 127mm f/4.7 Mamiya in interchangeable bayonet mount, stops to f/64, focusing to 3½ ft. (1.1 m).
SHUTTER: Seiko between-lens leaf in each lens with speeds from 1-1/500 sec. plus B, X sync at all speeds, M sync at speeds of 1/30 sec. and slower.
VIEWING: Combined, coincidence-type range/viewfinder with projected, parallax-compensating framelines for 127mm and 150mm lenses.
OTHER FEATURES: Integral left-hand trigger handle attaches to inter-lens shutter via external cable, interchangeable pack backs incorporate metal dark slide, accessory shoes atop main body section and grip, flash cord retaining clip on grip.
PRICE: $525 with 127mm lens and one film-pack holder; 75mm f/5.6 Mamiya wide-angle lens, $500 with auxiliary, manual parallax-compensating finder; 150mm f/5.6 Mamiya lens, $375.
MANUFACTURER: Mamiya Camera Co., Tokyo, Japan.
IMPORTER: Polaroid Corp., Cambridge, MA 02139.
PHYSICAL DIMENSIONS: Body, less grip and film holder, 5 in. wide, 6.7 in high, 2.9 in deep; Lens, 2.9 in. long, 3.3 in. diam.
WEIGHT: With grip, film holder, 3 lb. 9 oz.

While the vast majority of Polaroid's resources continue to be applied to the amateur photographic sector, the pros and advanced amateurs who rely on their products have not been forgotten.

Fortunately for Polaroid-using sophisticates, there was only the briefest hiatus between the discontinuance of the folding Polaroid 195 and the introduction of Polaroid's latest professional film-pack models, the 600 (with non-interchangeable 127mm lens) and 600 SE. Indeed, the latter model is the very machine that this segment of the market has long clamored for—a rugged, full-fledged professional, rangefinder-focusing field camera with fully interchangeable lenses and a removable film pack holder complete with dark slide. As a matter of fact, pros who shoot people and events will instantly recognize the 600 SE as the latest incarnation of an old friend, the Mamiya Universal press camera—hardly surprising since the whole rig is manufactured in Japan by Mamiya.

Since the 600 SE's lenses and back-mounted accessories are not interchangeable with the Mamiya Universal's, and the latter's Polaroid pack adapter can provide full frame (2⅞ x 3¾ in. image area) prints and negs with Polaroid pack films, the obvious questions faced by consumers is why not opt for the Mamiya instead of the Polaroid version? For one thing the venerable Universal was long ago conceived as a hand-held roll-film (and film pack) press camera, and the accessory Polaroid pack back was added later. As a result, only the 75mm and 127mm lenses will cover the *full* Polaroid pack format—the other optics will vignette in the corners and possibly the edges as well due to the camera's deep-set lens mount. In redesigning the lens mount to eliminate this problem, Polaroid opted for a noticeably shallower bayonet flange, permitting the rear section of the lens barrel to be shortened.

While the 600 SE has only two manually selected finder frames—one for the 127mm "normal" lens, another for the 150mm "medium tele," they show pretty much what you'll get on a Polaroid print (actually about 85 percent of the 2⅞ x 3¾ in. picture area), not the significantly smaller 2¼ x 3¼ or 2¼ x 2¾ in. (6 x 7cm) roll-film formats. Clearly, then, the Polaroid is a much better choice for hand-held shooting on Polaroid film packs—which is hardly surprising. To summarize our field test results, the 600 SE handles its assigned tasks as a field camera extremely well and represents a notable technical advance over its folding predecessors. Whatever its minor foibles, we're quite sure that serious photographers will be delighted with it. And since it's interchangeable at both ends, most of our minor complaints can easily be remedied.

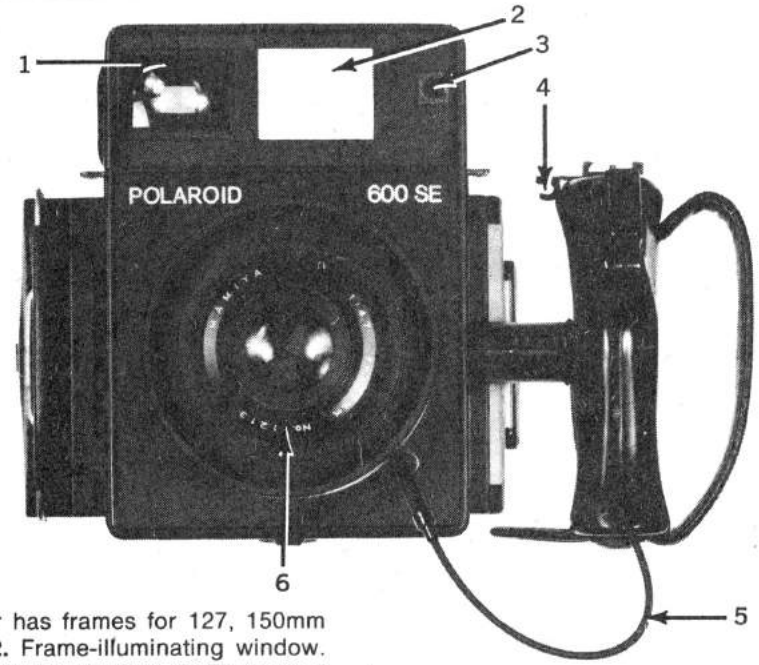

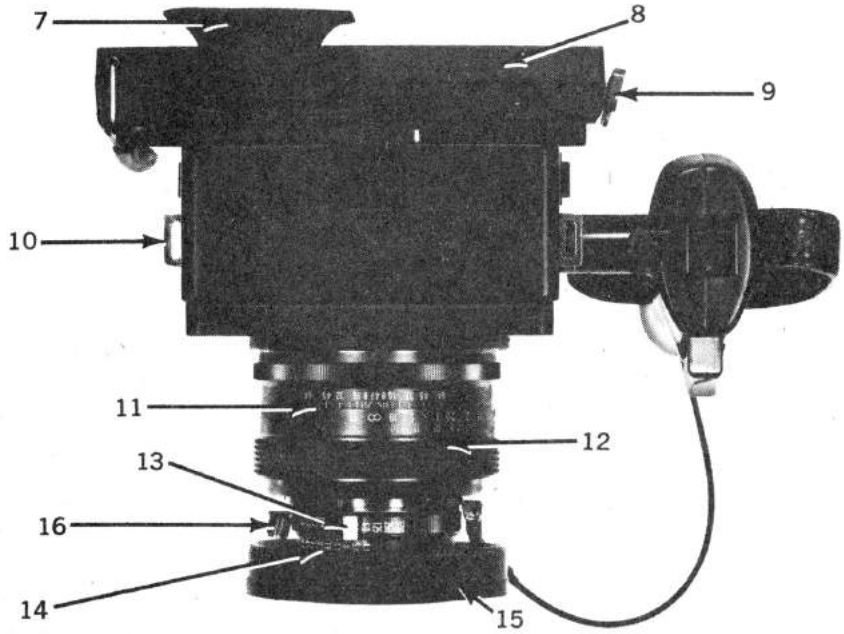

1. Finder has frames for 127, 150mm lenses. **2.** Frame-illuminating window. **3.** Rangefinder window. **4.** Flash cord hook. **5.** Screw-in cable release connects trigger on grip to interlens shutters. **6.** Lens. **7.** Rubber eyepiece cup. **8.** Film holder. **9.** Dark slide. **10.** Carrying strap lug. **11.** Depth-of-field scale. **12.** Textured rubber focusing ring. **13.** Shutter-speed ring. **14.** Aperture ring. **15.** Rubber lens hood. **16.** PC contact.

Asahi Pentax Auto 110

TYPE: 110 cartridge, eye-level single-lens reflex.
LENS: 24mm f/2.8 Pentax-110 in interchangeable bayonet mount, apertures via two-bladed shutter behind lens to f/13.5, focus to 13¾ in.
SHUTTER: Programmed, behind-lens, "vee-blade" shutter provides camera-selected auto-exposure speeds from 1 sec. (at f/2.8 to 1/750 sec. at f/13.5), autoflash sync speed of 1/30 sec. (at f/2.8).
VIEWING: Non-interchangeable eye-level pentaprism with quick-return mirror, central split-image focusing spot surrounded by matte field, full-focusing screen.
OTHER FEATURES: One 1.5-volt silver-oxide battery powered silicon (SPD) cell in pentaprism housing provides center-weighted auto-exposures at full aperture via combined shutter-speed/aperture program for films ASA 64-400, slow shutter speed (below 1/30 sec.) warning diode in finder, sync terminal provides autoflash with AF130P flash, accepts single-frame-advance Pentax 110 Winder.
PRICE: $249 with 24mm lens.
MANUFACTURER: Asahi Optical Co., Tokyo, Japan.
IMPORTER: Pentax Corp., Englewood, CO 80110.
PHYSICAL DIMENSIONS: 5¼ in. wide, 3¼ in. high, 3¼ in. deep.
WEIGHT: 6 oz.

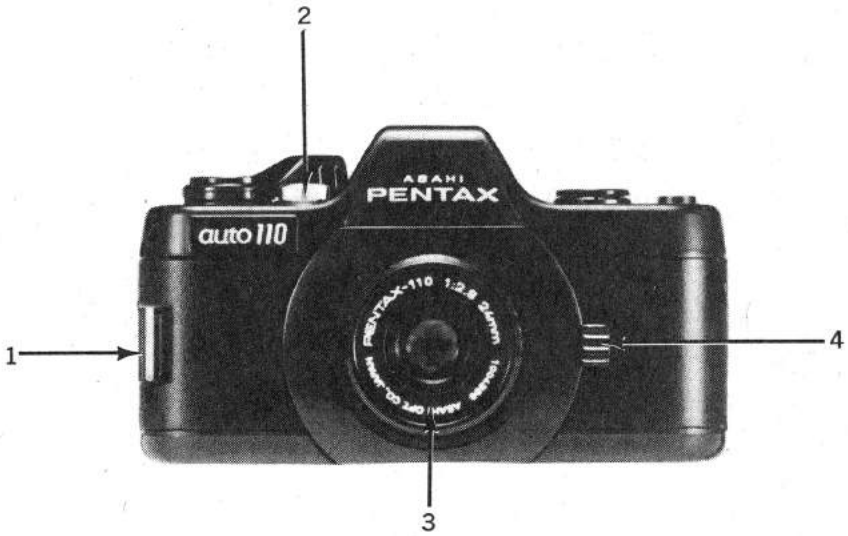

1. Wrist strap clip is in lieu of conventional neckstrap lugs. **2.** Soft-release shutter button is threaded to accept cable release. **3.** Interchangeable 24mm f/2.8 normal lens lacks internal diaphragm. **4.** Conventient lens-release lock slides upwards to release lenses. **5.** Double-stroke film-advance lever renders optional auto winder best for fast action. **6.** Covered socket accommodates Auto Flash AF 130P, but not other flash units. **7.** Switch sets camera to X-sync when dedicated flash unit is attached.

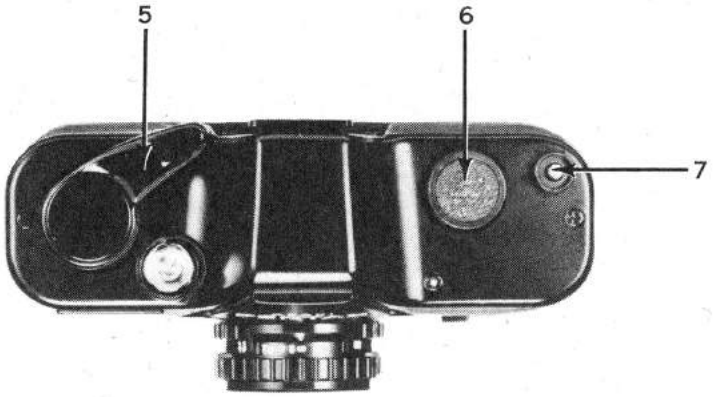

While the proliferation of 110 cameras in what can be called the "advanced amateur" class has resulted in everything from range-finder cameras with fast lenses to SLRs with wide-to-tele zooms, the Pentax 110 remains the only 110 camera to offer the basic features of an interchangeable-lens 35mm SLR in truly pocket-sized form. The good things that come along with this jewel-like package include all the latest 35mm SLR features, namely programmed auto-exposure, a dedicated flash unit, and a compatible auto winder.

In specifications, the Auto 110 is impressive. A single silicon photodiode cell inside the pentaprism housing provides a center-weighted auto-exposure reading which sets the shutter-speed/aperture program. When there's enough light for pictures above 1/30 sec. (meaning you can hand hold the camera), a green diode lights up in the lower right corner of the viewfinder. If an exposure below 1/30 sec. is needed, a yellow diode lights. And that's all the exposure information you get—there is no manual control or exposure compensation.

The viewfinder provides a bright-to-the corners, easily focusable image with a large, very good split-image rangefinder. The .75X life size magnification image shows some 87 percent of the 110 film area. Shutter noise is quite low.

After you use the 145° stroke rapid-wind lever to reach the first exposure (seen through a transparent back panel), two strokes of the lever advances film and winds the shutter for the next exposure.

Slide a tiny but adequate lever near the lens mount and you can remove the normal lens with an 80° twist of the bayonet. At present there are two accessory lenses: a six-element 18mm F/2.8 wide-angle, focusing to 9¼ in., and a five-element 50mm f/2.8 focusing to 35½ in.

The Pentax 110 winder, only some 2 in. high, and 3 15/16 in. long, weighs only 4 oz. without its two AA cells. When switched on, it winds film and shutter very quietly after the touch of the camera's release button at a rate of about 1 shot per sec.

The other major accessory available at the moment is the AF130P Auto Flash which threads and locks onto a top socket of the Pentax Auto 110 to provide 250 auto exposures from 2.6 ft. to 15 ft. at 1/30 sec. with two alkaline energizer cell batteries. It's a bit large but weighs only 3.6 oz.

With the Pentax Auto 110, tyros have at last an SLR which they can run, interchange lenses, and enjoy with no need to know anything about photography. But we too will have a real precision-made gem for serious photographers aiming to utilize the 110 format. As our exhaustive test proved, it can deliver first-class results.

Minolta 110 Zoom Mark II

TYPE: 110 cartridge loading, eye-level single-lens reflex.
LENS: 25-67.5mm f/3.5 Zoom Rokkor-Macro in fixed mount, with stops to f/16 and focusing to 3.6 ft., close focus to 7.7 in.
SHUTTER: Electronically-controlled behind lens metal blade with speeds from ¼ to 1/1000 sec. plus B, X sync, electronic self-timer.
VIEWING: Non-interchangeable eye-level prism with central split-image rangefinder, full-focusing screen.
OTHER FEATURES: Silver-oxide battery-powered CdS exposure meter sets shutter speed for any chosen aperture, fully automatic (aperture-preferred) exposure control, auto-exposure compensation, shutter speed with diode light indication and flash ready signal in finder, hot sync shoe, provision for shutter-setting auto-exposure flash unit, shutter release lock.
PRICE: $342.
MANUFACTURER: Minolta Camera Co. Ltd., Osaka, Japan.
IMPORTER: Minolta Corp., Ramsey, NJ 07446.
PHYSICAL DIMENSIONS: 4 in. wide, 3 in. high, 3⅞ in. deep.
WEIGHT: 16½ oz.

If there was ever any doubt as to the validity of the 110 SLR concept, we offer the fact that Minolta, its pioneer, has revised and improved its original 110 Zoom SLR—a rather unwieldy camera resembling a flat, extended body 110. It was, therefore, neither 110 nor 35. The new Mark II, however, looks like a compacted 35mm SLR, and that's just about what it is. It has several holdover features (in addition to the 110 cartridge load, of course) but, by and large, we now have a mini 35, right down to its rapid-return mirror.

Most of the II's controls are on top (or visible from above) as they should be, but even more significant is the fact that its aperture-preferred automatic exposure control is governed by a conventional behind-lens meter. The ASA, of course, is still set by the notching system on the cartridge. At the right end of the body top we have a large knurled dial (5) that gives you the three-way (Auto, B, shutter lock) exposure mode control. A similar dial at the other end (10) takes care of aperture setting on the new 25-67.5mm f/3.5 Zoom Rokkor-Macro lens (1). Not only is this optic faster and longer, its close-focusing capability has been extended from 8¼ to 7½ in. To get into the macro mode you just flick a switch (12) on top of the lens barrel. This close-focusing system can be put into effect at any focal length.

Among the additions we like is the ± 2 stop auto exposure compensation (11), an extra that brings the system more in line with its counterparts on the "big" cameras. On the other hand, the range of electronically-controlled shutter speeds has been cut from a full 10 sec. to ¼ sec. on the slow end, while the top speed has been maintained at the 1/1000 sec. mark.

More changes come thick and fast when you look through the finder with its adjustable eyepiece and generally brighter outlook. The central focusing aid is now a split-image rangefinder, befitting a longish zoom lens (the equivalent of 50-135mm on a 35mm camera) but the most important addition is the shutter-speed scale along the left-hand edge. The set speed is indicated via a red LED, a jazzy modern feature that also comes in handy for flash. Slip Minolta's equally new Auto Electroflash 118X dedicated electronic flash unit into the hot shoe (7) with tell-tale dot (8), turn it on and the shutter is automatically set at 1/125 sec. A pulsing red LED in the finder lets you know when the unit has recycled fully. (You can also use any other unit without the dedicated control.)

While the 110 Zoom SLR Mark II thus is controlled just like a 35, its rather small, 110ish size might well work against your handling it easily and efficiently. To that end, Minolta has wisely provided a detachable grip (2) that provides the extra bulk and gripping surface for all you 110 photographers with big hands.

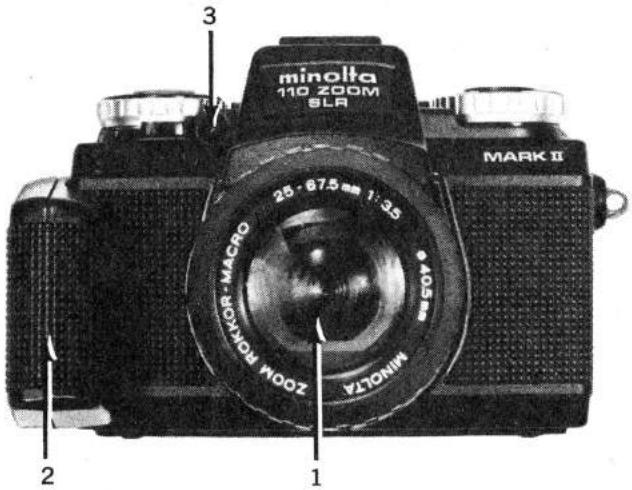

1. 25-67.5mm f/3.5 zoom-macro lens. **2.** Detachable hand grip. **3.** Electronic self-timer LED. **4.** Shutter release button. **5.** Exposure control setting dial. **6.** Exposure setting index. **7.** Hot sync shoe. **8.** Contact for dedicated flash unit. **9.** Aperture setting index. **10.** Aperture control ring. **11.** Auto exposure compensation dial. **12.** Close focus control switch. **13.** Zoom control ring. **14.** Footage scale. **15.** Focusing ring.

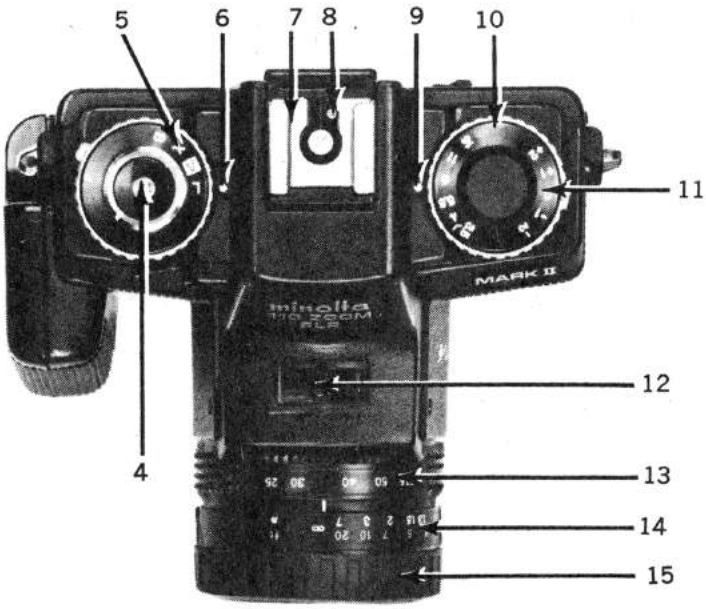

Widelux F7

TYPE: 35mm ultra-wide-angle panoramic-viewfinder camera.
LENS: Fixed-focus 26mm f/2.8 Lux Special, stops to f/11.
SHUTTER: Revolving drum-type focal plane with speeds of 1/15, 1/125 and 1/250 sec.
VIEWING: Super-wide optical finder.
OTHER FEATURES: Revolving lens-shutter drum, takes eleven 24 x 59mm 140° panoramic pictures on a 20-exp. roll, 21 on 36-exp. roll.
PRICE: $934 including case.
MANUFACTURER: Panon Camera Co., Tokyo, Japan.
IMPORTER: Olden Camera & Lens Co., Inc., New York, NY 10001.
PHYSICAL DIMENSIONS: 6⅞ in. wide, 3⅝ in. high, 2½ in. deep.
WEIGHT: 1 lb. 13 oz.

The unique Widelux F7 remains one of the few "curiosity" cameras that works and works well to provide one of the most unusual formats in photography.

You start out with conventional 35mm film and wind up with a 49° x 132° angle of view on a format that works out to 24 x 59mm. While there are other ways to go super wide, the Widelux, with its non-interchangeable 26mm f/2.8 pivoting lens, makes the task effortless.

The results are greater horizontal coverage than a 17mm SLR lens, less distortion than a semi-fisheye (defined as a lens with diagonal coverage of 180°) and larger format than either. Carrying the idea to its obvious extreme, you could produce mural-sized enlargements mounted on concave surfaces, practically wrapping you in the original scene.

The Widelux accomplishes its feat with a lens that revolves over the scene when you press the shutter release. Film lies curved to match the lens' angle of rotation, producing images nearly free of optical distortion. We say nearly, because the center of the subject is actually at a greater magnification than the edges, resulting in some distortion as the perspective changes. But this is only apparent when the camera is parallel to the subject and the subject is perfectly rectangular. The apparent outward bowing of edges, however, is substantially reduced when aiming this camera at most other subjects—such as dramatic landscapes. Loading requires a film leader slightly longer than that usually needed for 35mm cameras. Threading the film through the two guide rollers and the sprocket is somewhat complicated at first. After checking the frame counter to be sure it's at zero (it zeros automatically), you start winding to the first frame. Shutter speeds must be set after the film is wound—just like the old Leicas, except you needn't lift up the speed dial. The aperture is set with a dial located just in front of the shutter-speed dial. As you press the shutter-release button (3), you hear a zipping noise, the result of the lens turning on its supporting drum axis. The front side of the drum has an opening for the lens, and the back side has another opening for the shutter slit as it passes in front of the film plane. The front remains open at all times, while the rear opening closes when you wind the film and opens only when you click the shutter. You must hold the wind knob, however, or it may spring back under film tension.

Shutter speed accuracy depends entirely on the turning speed of the drum. More important, however, is the evenness of exposure. How to test this unconventional apparatus? We used high-frequency electronic flash and a special formula to measure the flash stripes produced on film by the shutter slit (2mm wide) at the three speeds on the camera: 1/15, 1/125 and 1/250 sec. Results showed no appreciable speed variation, with even exposures edge-to-edge.

The Widelux may be expensive for a camera with three shutter speeds and limited controls, but its one special asset covers abundant ground. When you project Widelux slides (in special mounts that fit a 6 x 6cm projector) or make enlargements, you cannot help but be impressed.

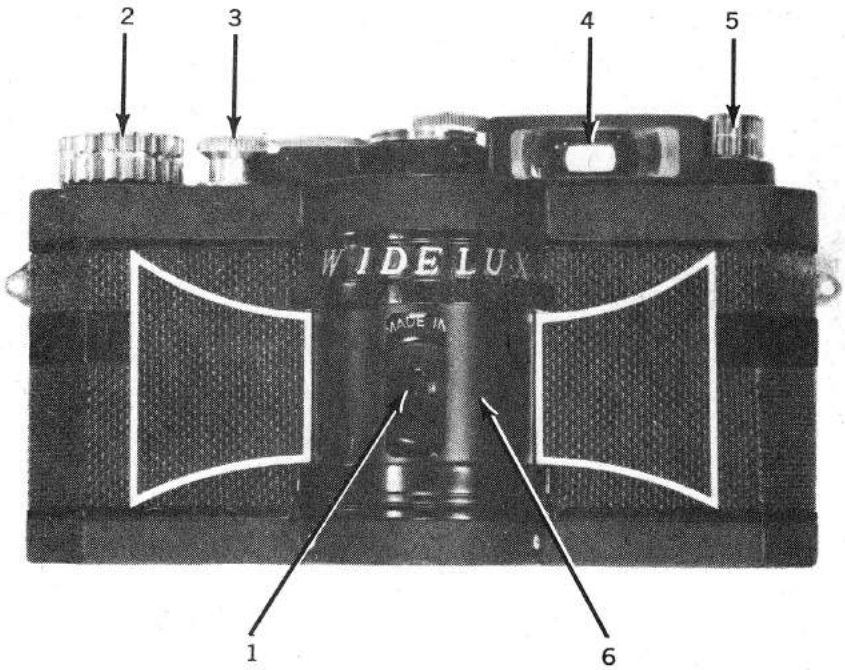

1. Opening for fixed-focus, pivoting 26mm f/2.8 lens. **2.** Film-advance knob. **3.** Shutter-release button. **4.** Super wide-angle Galilean-type optical finder. **5.** Film-rewind knob. **6.** Lens/shutter drum. **7.** Bubble level. **8.** Cameraback locking knob. **9.** Manual shutter-speed dial with 1/15, 1/125 and 1/250 sec. **10.** Clickless aperture-control dial for stops from f/2.8 to f/11.