June 4, 1940. J. MIHALYI 2,203,657

CURTAIN SHUTTER

Filed June 7, 1938 5 Sheets-Sheet 1

Fig. 1.

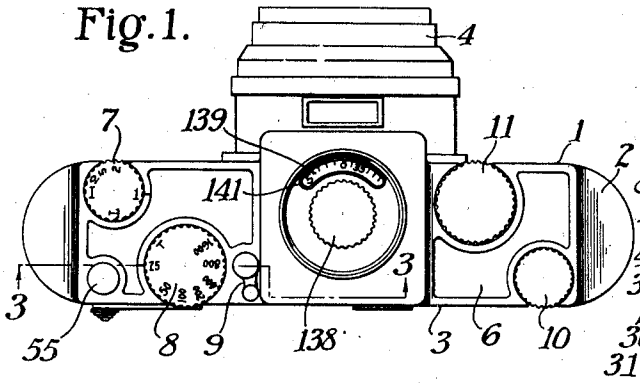

Fig. 4.

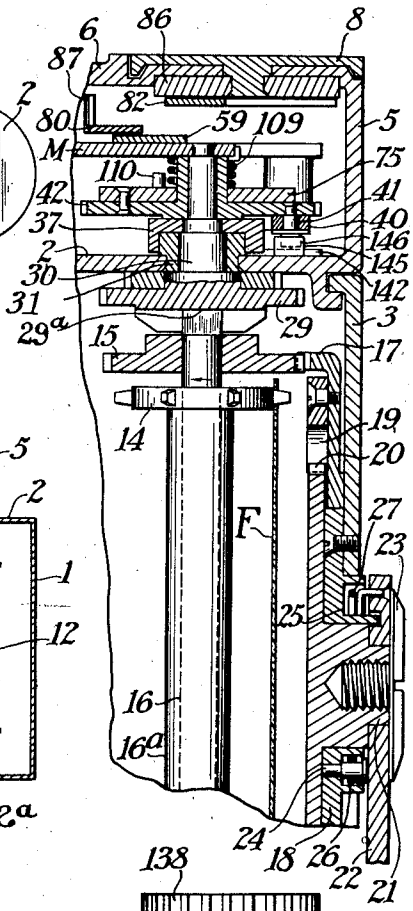

Fig. 2.

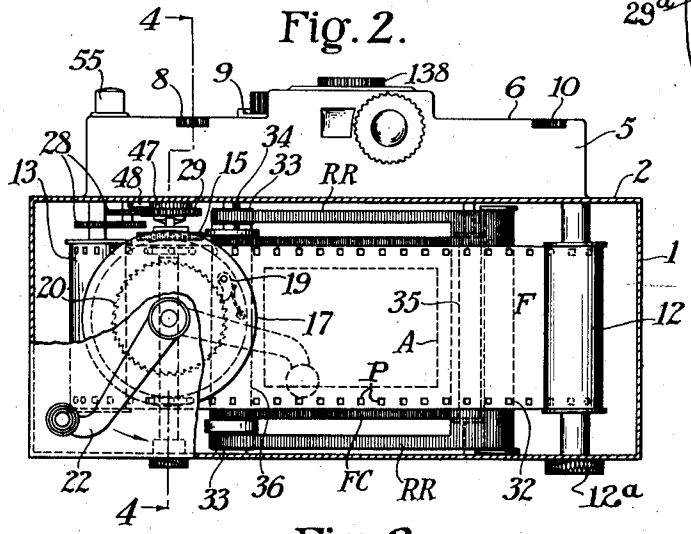

Fig. 3.

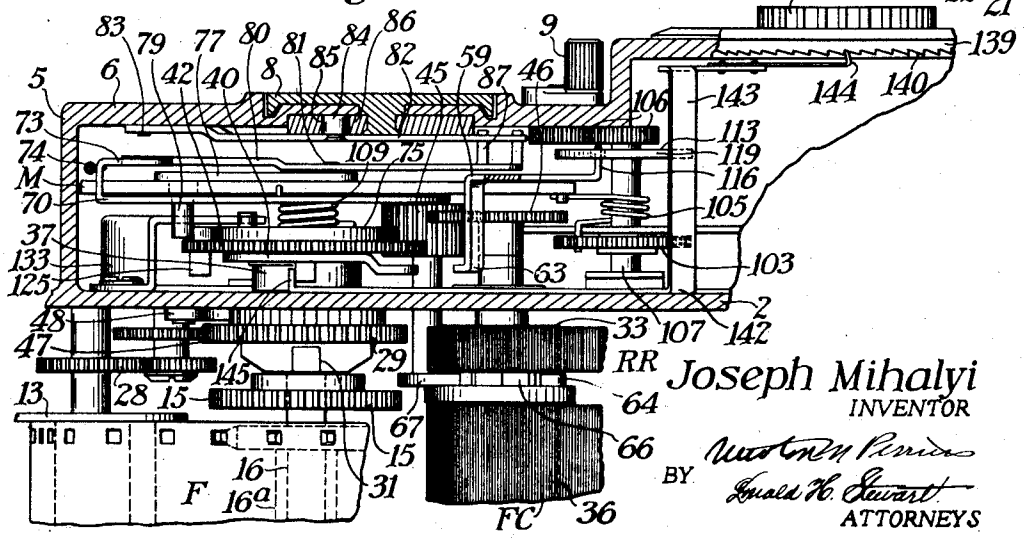

Joseph Mihalyi
INVENTOR

BY Wm. Owen Perrin
Ernest H. Stewart
ATTORNEYS

June 4, 1940. J. MIHALYI 2,203,657

CURTAIN SHUTTER

Filed June 7, 1938 5 Sheets-Sheet 2

Fig. 5.

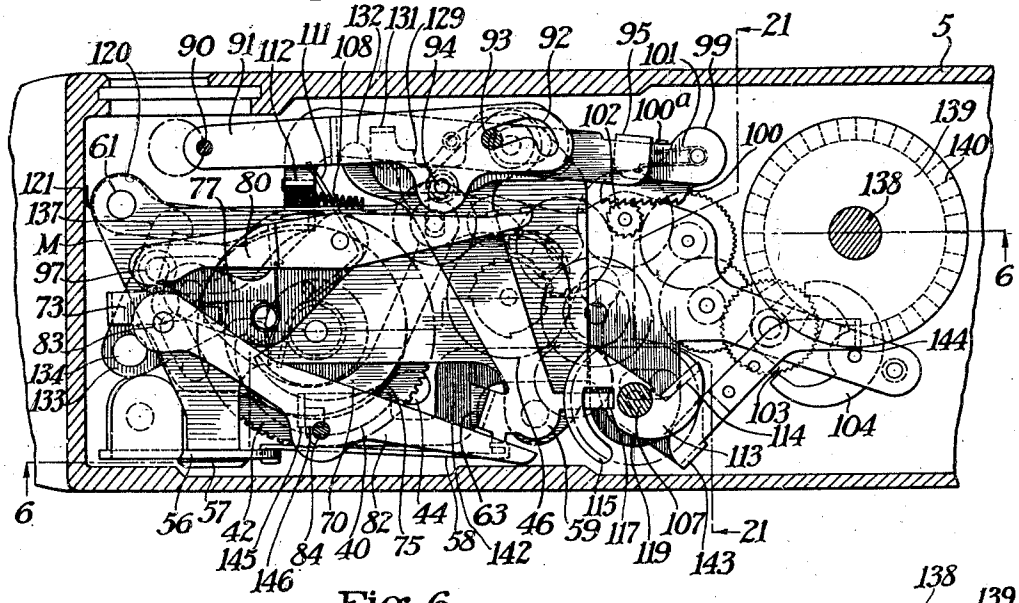

Fig. 6.

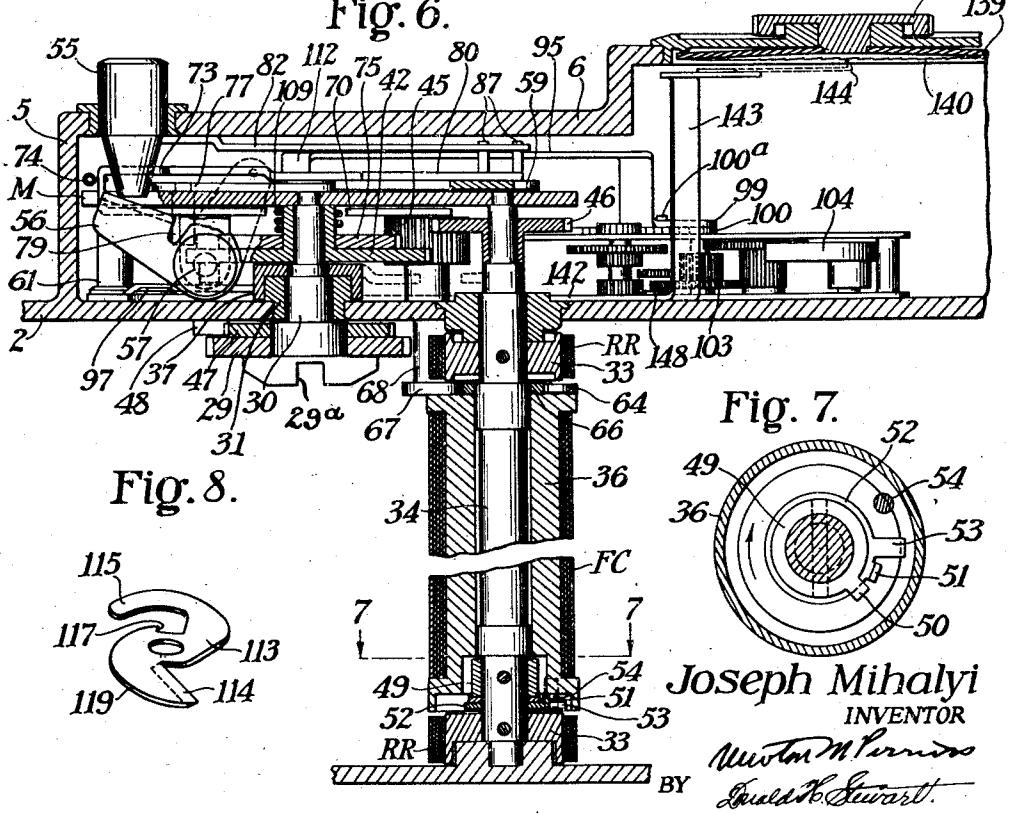

Fig. 7.

Fig. 8.

Joseph Mihalyi
INVENTOR

BY Newton M. Perrins
Donald H. Stewart
ATTORNEYS

June 4, 1940. J. MIHALYI 2,203,657

CURTAIN SHUTTER

Filed June 7, 1938 5 Sheets-Sheet 3

Fig. 9.

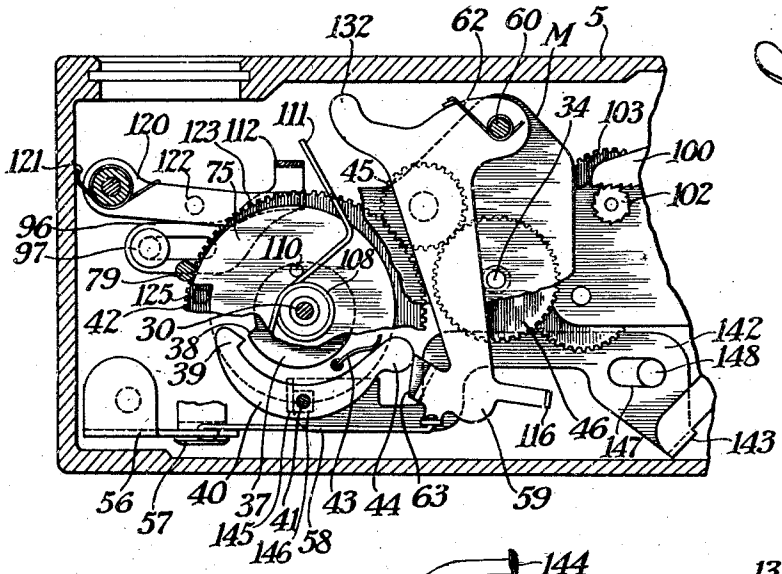

Fig. 10.

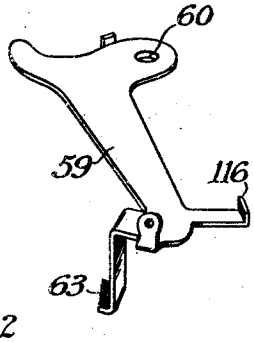

Fig. 12.

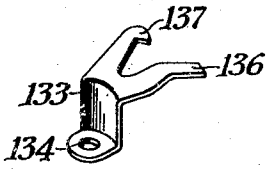

Fig. 11.

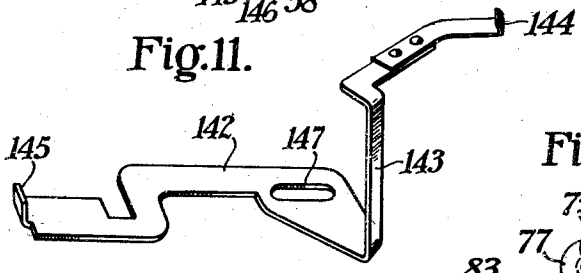

Fig. 14.

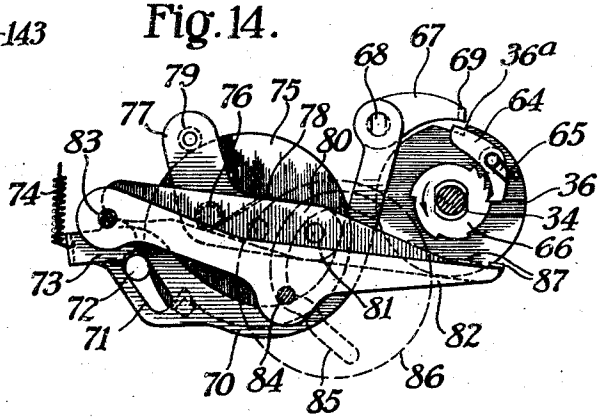

Fig. 13.

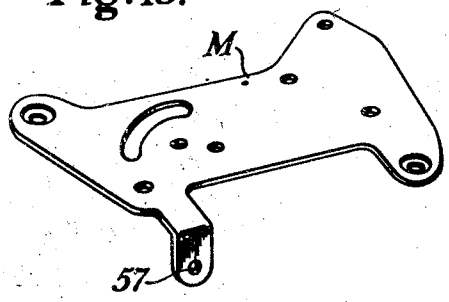

Joseph Mihalyi
INVENTOR

BY Austin M. Parris
Donald H. Stewart
ATTORNEYS

June 4, 1940. J. MIHALYI 2,203,657

CURTAIN SHUTTER

Filed June 7, 1938 5 Sheets-Sheet 4

Fig.15.

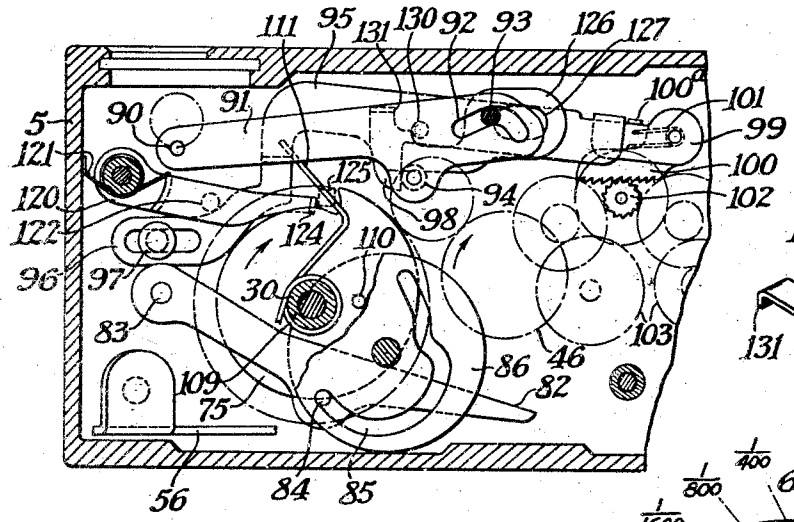

Fig.18.

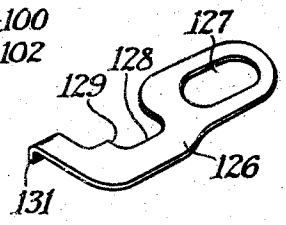

Fig.19.

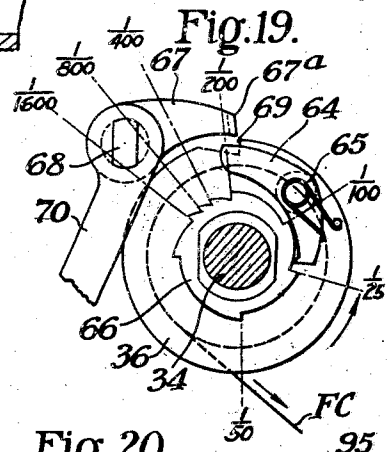

Fig.16.

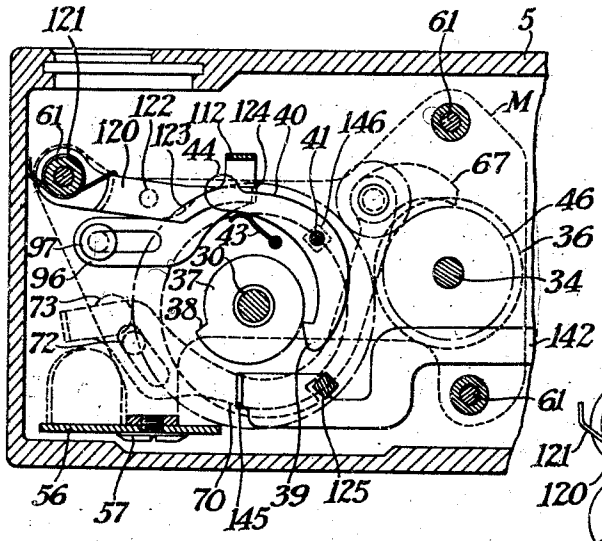

Fig.20.

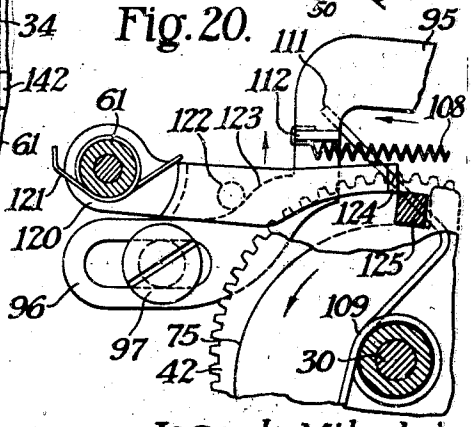

Fig.17.

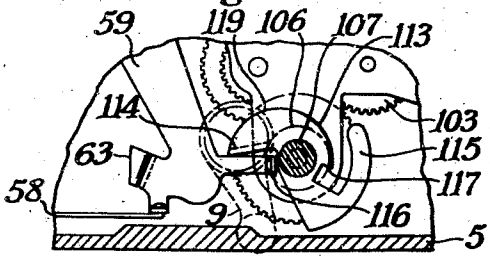

Joseph Mihalyi
INVENTOR

BY
ATTORNEYS

June 4, 1940. J. MIHALYI 2,203,657

CURTAIN SHUTTER

Filed June 7, 1938 5 Sheets-Sheet 5

Fig. 24.

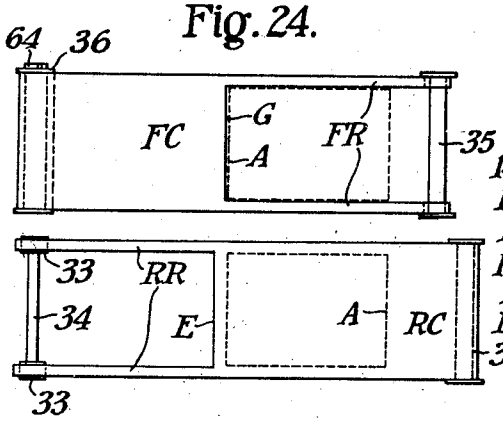

Fig. 21.

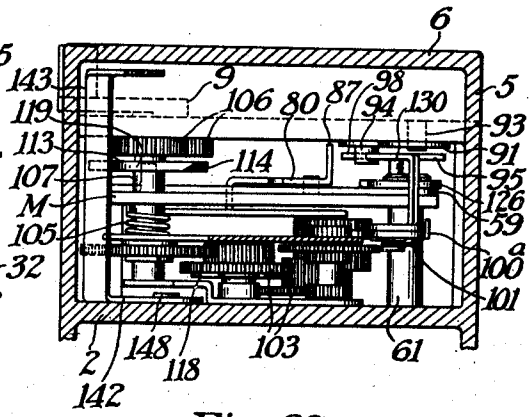

Fig. 25.

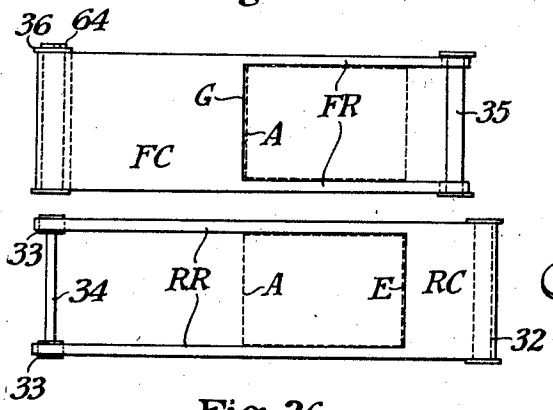

Fig. 22.

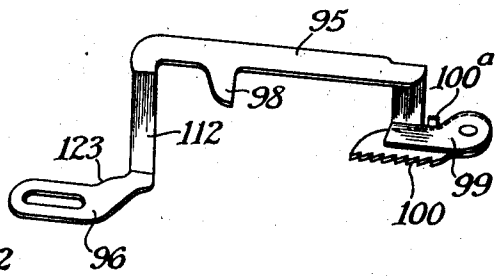

Fig. 26.

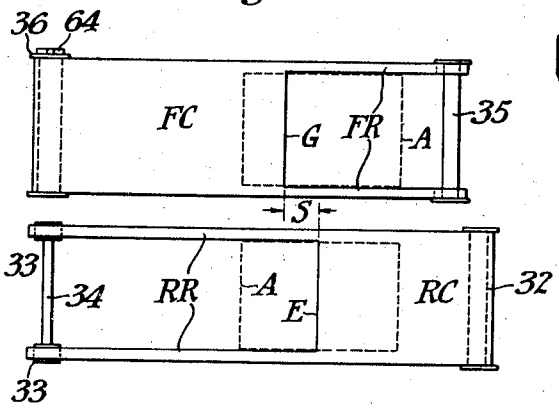

Fig. 23.

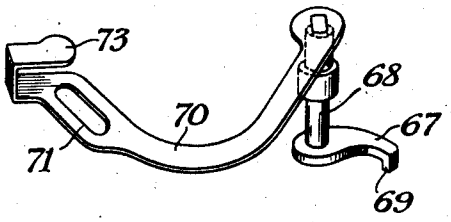

Joseph Mihalyi
INVENTOR

BY Walter M. Pierce
Donald R. Stewart
ATTORNEYS

Patented June 4, 1940 2,203,657

UNITED STATES PATENT OFFICE

2,203,657

CURTAIN SHUTTER

Joseph Mihalyi, Rochester, N. Y., assignor to Eastman Kodak Company, Rochester, N. Y., a corporation of New Jersey

Application June 7, 1938, Serial No. 212,269

22 Claims. (Cl. 95—57)

This invention relates to photography and more particularly to shutters for photographic cameras of the type employing flexible curtains which are usually mounted in the camera close to the focal plane. Such shutters are sometimes called "focal plane shutters."

One of the objects of the present invention is to provide a shutter with an improved form of time-regulating device. Another object of my invention is to provide a shutter equipped with a slow automatic speed time-regulating device which can be readily adjusted for the desired exposure by altering suitable dials either before or after the shutter springs have been tensioned. Another object of my invention is to provide a shutter of the type described with a slow speed timing mechanism which is equipped with its own power spring so that the power springs for moving the curtains are not affected by the power spring which operates the slow speed regulating mechanism. Another object of my invention is to provide a slow speed regulating mechanism with a power spring which may be set automatically as the power springs for the curtains are set. Still another object of my invention is to provide a single manually operable member for simultaneously setting the curtain springs and the slow speed regulating mechanism spring. A still further object of my invention is to provide a retard member which is movably mounted so that each time the shutter is actuated, this member may move in one direction and each time the shutter is wound, it may be moved in an opposite direction to connect a retarding gear train with a curtain tripping mechanism so that one curtain may be actuated at a predetermined time interval after the actuation of the other curtain. A still further object of my invention is to provide a manually operable means for moving the retard member to various positions for different automatic speeds and for moving it into a position in which a gear train is ineffective for reducing the speed of an exposure. Another object of my invention is to provide a means for delaying the start of an exposure and for controlling the duration of the exposure when made. Still other objects will appear from the following specification, the novel features being particularly pointed out in the claims at the end thereof.

Coming now to the drawings wherein like reference characters denote like parts throughout:

Fig. 1 is a top plan of a camera of the so-called "miniature" type, equipped with a curtain shutter embodying the controls and other constructional details of the present invention;

Fig. 2 is a rear elevation of the camera shown in Fig. 1, most of the rear wall being removed to show the film traverse and winding mechanism;

Fig. 3 is an enlarged fragmentary sectional elevation taken on the line 3—3 indicated in Fig. 1;

Fig. 4 is a fragmentary transverse sectional elevation from Fig. 2 taken on the line 4—4 thereof;

Fig. 5 is a plan view of the complete operating mechanism of the shutter as it would appear if the top of the control housing in Fig. 1 were removed;

Fig. 6 is an enlarged partial section on the line 6—6 of Fig. 5;

Fig. 7 is a plan view of a detail relating to the curtain winding rollers;

Fig. 8 is a perspective view of the "delayed action" cam;

Fig. 9 is a partial plan showing the trigger depressed and the shutter released, but before movement of the latter has occurred;

Figs. 10, 11, 12 and 13 are perspective views of detail parts;

Fig. 14 is a fragmentary plan showing certain parts in the relation established when the shutter is released at an intermediate speed;

Fig. 15 is a partial plan showing the members operative for "time" exposures;

Fig. 16 is a partial plan on a plane below that of Fig. 15, and showing some of the curtain latching parts as they would appear when the shutter is partially wound;

Fig. 17 is a fragmentary plan showing the "delayed action" mechanism unwound;

Fig. 18 is a perspective view of a detail;

Fig. 19 is a fragmentary plan showing the curtain roller latch and a speed-control member;

Fig. 20 is a fragmentary plan showing parts concerned with slow exposures, about to be tripped;

Fig. 21 is a transverse section of the upper housing taken on line 21—21, Fig. 5;

Figs. 22 and 23 are perspective views of details;

Fig. 24 shows, diagrammatically, the two curtain members as they would appear if separated, and in wound condition;

Fig. 25 is a similar view, the shutter having been released for slow automatic exposures; and

Fig. 26 is a similar view with the shutter slit passing the exposure aperture during a fast exposure.

One of the difficulties of obtaining relatively slow exposures with focal plane shutters in the

past has been that it has been customary to interpose some retarding member such as air-pot, gear retard, friction member or the like in the path of the moving curtains so that some member operated by the spring or springs moving the curtains would be retarded while the curtains still moved. Thus the operation of the springs moving the curtains was altered so that the torque of the spring would be varied for various different exposures. If relatively strong springs were used for driving the curtains, the retarding members such as the gear train would have to be made exceedingly large and strong to slow down the action of such springs. If on the other hand the springs were designed to move the curtains at their maximum speed, and yet have but little reserve power, the action of the springs would be rather uncertain with the retarding mechanism and the opening and closing movements of the curtains would be relatively slow and therefore the efficiency of this shutter would be impaired.

With my improved shutter I prefer to provide entirely separate springs for the curtains and for the retarding mechanism so that the curtains can move to open and close the exposure aperture with their maximum rapidity and so that the delayed times can be obtained by a separate power spring which acts only on the restarding mechanism and which does not affect the power springs or the curtains. Thus I propose a shutter in which for slow exposures one curtain may move rapidly to open the exposure aperture after which a retarding member will move slowly and under its own spring power to determine the duration of the exposure,—such as for instance, ½ a second—and at the end of its movement it may trip the second curtain which in turn may move with its maximum rapidity to close the exposure aperture.

Since the opening and closing times of any shutter should be as fast as possible for the maximum efficiency, it will thus be seen that my new construction lends itself particularly to shutters having a high degree of efficiency, the opening and closing times being an extremely small proportion of the total time of the exposure.

Brief General Description

In this invention a camera is provided with a curtain shutter consisting of two parts arranged to move together or separately across an exposure frame in the camera, and between said frame and the photographic film. Control means are provided whereby the distance one curtain moves before the other starts to move may be varied from an extremely narrow slit for fast exposures, up to a slit the full width of the exposure frame. Means are also provided whereby the full width slit may be held over the exposure frame for any required time to produce either "automatic" exposures of from 1/10 to 1 second duration, or time exposures of any length.

As in my copending application, Ser. No. 174,443, the "winding" of the curtains against the constant action of coil springs in the foot rollers and into a latched or set position is accomplished by one or more strokes of a finger-operated crank on the rear wall of the camera. Release of the shutter occurs when the trigger is pressed once. A delayed-action mechanism may be interposed if desired, which prevents the actual movement of the curtains across the exposure frame after the trigger has been pressed, until a predetermined interval has elapsed.

Although a camera of the "miniature" type is illustrated, it is quite feasible to apply a curtain shuttter constructed in accordance with this invention to cameras of other types.

Showing in Drawings

In many figures of the drawings certain parts have been omitted because the small size thereof would render the drawings difficult to read (see for instance Fig. 5 wherein practically all parts are shown). Some supports, levers, cams, etc., omitted in some of the figures will be found in others and their particular functions will be explained in connection with such showings. Therefore, each figure of the drawing may not be complete in itself, but all of the parts will be found shown in various operative positions as may be required for a clear understanding of the invention and the novel features thereof.

Illustrated Embodiment

The camera to which the curtain shutter of the present invention is shown applied has a body 1 with a top wall 2, rear wall 3, and a focusing lens fixed in a suitable mounting unit 4. The top wall 2 carries a housing or superstructure 5, within which most of the shutter control parts are arranged. On the upper surface 6 of the housing 5 are mounted the various manual controls or setting dials, which include the slow speed and time exposure selector 7, the high speed selector 8, the delayed exposure setting lever 9 and other dials 10 and 11 connected with the range finding and lens compensating adjustments, these last two not being related to the present invention.

The body 1 is adapted to hold perforated roll film F, supplied from a casette or magazine 12 and adapted to be wound onto a spool 13 in the opposite end of the camera. The film is transported from the casette to the spool 13 by driven sprockets 14, the teeth of which engage perforations P in the film. These sprockets are so proportioned that a single full revolution thereof advances the film one "frame." Movement of the sprockets is accomplished through a gear 15, mounted on the sprocket shaft 16. The latter extends through a sleeve 16ª by means of which a separable connection (not shown) may be utilized to provide for winding the film back into the casette 12 by means of a knob 12ª. Gear 15 is constantly in engagement with a crown gear 17 lying against the inside of the rear wall 3. This crown gear is revoluble on a fixed bearing 18 and carries on its inner face a spring-pressed pawl 19, which is caught by teeth on a ratchet 20 when the latter is rotated counterclockwise (Fig. 2). The ratchet hub has a square end 21, to which a crank 22 is attached by a stud 23. A pin 24, is set into an annular depression 25 in the bearing 18 (Fig. 4) and to this pin is attached one end of a light torsion spring 26, the other end of said spring being anchored in the crank 22 at 27.

When the crank 22 is moved in the direction indicated in Fig. 2 the ratchet 20 through its engagement with pawl 19 drives crown gear 17 and spur gear 15 to revolve shaft 16 in the direction shown in Fig. 4, or in a clockwise direction when viewed from above. The spring 26 returns the crank to the normal position shown in full lines in Fig. 2 the ratchet teeth riding freely under pawl 19.

The same movement of the crank 22 that advances the film also rotates the spool 13, through

a train of gears 28 that are engaged by a gear 29 on a stub shaft 30, revoluble in a bushing 31, fixed in the top wall 2. An overrunning clutch, not shown, is provided in this gear train to compensate for the increasing diameter of the roll of film on spool 13. The upper end of shaft 16 is squared and enters a slot 29a in the bottom of gear 28, in the bottom of gear 29, thus providing a separable driving connection between gears 15 and 29.

Curtain Structure

The shutter proper comprises two curtains, the rearmost of which, designated RC is fastened at one end to a spring roller 32, and by ribbons RR on its other end to spools 33 fixed on a shaft 34 (Figs. 6 and 24) that extends up into the housing 1. The front curtain FC (nearest the lens) is fastened by means of ribbons FR to a spring roller 35 and at its other end (left end in Fig. 2) to a roller 36 that is revoluble on shaft 34. The roller 36 and spools 33 are hereinafter referred to as "winding" rolls, while the spring driven rollers 32 and 35 are called the "foot rollers."

The foot rollers 32 and 35 are constructed in the usual manner with torsion springs that constantly urge these rollers to rotate counter clockwise (as viewed from above) and tending to carry the curtains from left to right across the exposure frame A. The winding of the curtains, or the "setting" of the shutter, is in opposition to the force exerted by the foot roller springs.

Curtain latching and releasing mechanism

In winding, the movement of crank 22 before described rotates shaft 30 in a clockwise direction. A collar 37, centered on shaft 30 and affixed thereto has a single projecting tooth 38 (Fig. 9). This tooth is engaged by a hook 39 on a pawl 40 that is pivoted at 41 on the underside of a gear 42, the latter being revoluble on the reduced portion of shaft 30. The hook 39 is held normally in engagement with the tooth 38 by a spring 43 that presses against the bulb shaped tail 44 of the pawl. Collar 37 rotating clockwise thus carries pawl 40 and gear 42 with it, and the latter through an idler gear 45, drives a gear 46 pinned to shaft 34, and thus rotates said shaft clockwise also. A ratchet 47 fixed on shaft 30 and engaged by a stationary pawl 48 prevents said shaft, and therefore the collar 37, from rotating counter-clockwise, although gears 42 and 46 may be so rotated, when released, through the pull of the curtains when urged by rollers 32 and 35.

The spools 33, as the crank 22 is moved to the right, carry the rear curtain RC to the left (Figs. 24 to 26) to cover the frame aperture A.

During this movement, a collar 49, pinned to the shaft 34 in a recess in the bottom of roller 36, makes nearly one revolution and then a lug 50 projecting from said collar strikes an upstanding lug 51 on a loose washer 52 and carries it around until a lateral lug 53 on washer 52 strikes a pin 54 that projects downwardly from the bottom of roller 36. The latter, which carries the curtain FC, is thus picked up and as it revolves the curtain FC is wound thereon and is moved across the frame A. When fully wound the two curtains occupy the positions relative to frame A indicated in Fig. 24. For clearness, it will be noted, the two curtains with their respective rollers and spools are shown separated, whereas in the actual structure one overlies the other. The aperture A is therefore fully covered at all stages of the windup operation, and when fully wound the left edge E of RC is about ⅛ inch to the left of the frame A.

The parts above described are prevented from "unwinding," that is, the curtains RC and FC cannot be moved to the right and onto the rollers 32 and 35 because the pawl hook 39 is caught into the tooth 38 on collar 37, and the latter cannot be rotated backwardly, or counterclockwise, because of the ratchet 47 which is held by pawl 48. To release the curtains the pawl 40 must be moved so that the hook 39 is freed from the tooth 38; and means are provided for this purpose and are shown in Fig. 9.

The operating button 55 projects through the top wall 6 of the housing 5, and it lower end contacts a trigger member comprising a bellcrank 56, pivoted at 57. One arm of this bellcrank is connected by a link 58 to a horizontally movable lever 59, hereinafter referred to as the release member. This member is pivoted at 60 on a plate M, which may be termed the mechanism plate, as it also carries a number of other movable parts and is supported by suitable spacers and studs 61 at the required distance from the camera top wall 2. A suitable spring 62 tends to swing the release member 59 about its pivot and to move its free end toward the right.

If the button 55 is pressed, the bellcrank is swung about its pivot and the link 58 pulls member 59 toward the left. A downturned lug 63 (Figs. 9 and 10) then strikes the end 44 of pawl 40 and swings the latter sufficiently to move hook 39 away from the tooth 38. As the spring-rollers 32 and 35 are at all times pulling the curtains RC and FC, the curtains would be free to move across the frame A when the pawl 40 is disengaged, but to prevent and control such action, certain detents and restraining devices including timing mechanism are provided as will be described.

Referring first to Figs. 14 and 19, it will be noted that the top face of roller 36 carries a pawl 64, constantly urged by a spring 65 toward a ratchet 66, hereinafter referred to as the timing ratchet, which is fixed to shaft 34. It is therefore obvious that this ratchet may revolve with the shaft 34 relatively to the roller 36, provided that the latter is held against rotation. Normally, roller 36 is so held by a dog 67 that is fixed to a short shaft 68 extending through the top wall 2. This is the same shaft that carries idler gear 45, the latter being freely revoluble thereon. The end of dog 67 has a downturned lug 69 (Fig. 23) that normally rests in a notch 36a in the upper flange of roller 36, thereby holding the latter against counter-clockwise rotation under the constant pull of its foot-roller 35. The lug 69 in addition to engaging the notch 36a also strikes the tail of pawl 64 and holds the toothed end thereof away from ratchet 66.

Fixed upon the upper end of shaft 68 is a lever 70 with a slot 71 guided by a fixed pin 72. The extreme left end 73 of lever 70 is turned up and over the plate M (see Figs. 6 and 23) to align with a trip lever later described. Lever 70 is referred to henceforth as the curtain latch lever. A spring 74 tends to hold the latch lever 70 in the position of Fig. 5 so that the lug 69 of dog 67 will turn pawl 64 against the action of the light spring 65 and free the tooth of the pawl from ratchet 66. In this condition the shaft 34 and therefore the spools 33 and curtain RC are free to move if pawl 40 is tripped by release member 59, but roller 36 and curtain FC are held by dog 67.

It is necessary, in order to pass a slit of various widths across frame A, to release the curtain

RC from the position of Fig. 24 and then at a required interval thereafter to release curtain FC, so that the relative positions of the two curtains will form the slit, S, between the left edge E of RC and the right edge G of FC. The means for varying the width of this slit by regulating the time interval between the kickoff of pawl 48 and the tripping of latch dog 67 will now be described.

Fixed to the top of gear 42 is a cam 75 (Figs. 9 and 14). Pivoted at 76 on the top of plate M is a bellcrank 77, urged clockwise by a spring 78 so that a pin 79 projecting downwardly is caused to bear against the periphery of the cam. As the cam 75 revolves counterclockwise with gear 42 whenever the pawl 48 is kicked off by release member 59, the bellcrank 77 will turn clockwise about the pivot 76 until the pin 79 strikes the cam, the contour of the latter being so designed that the farther it rotates counterclockwise the greater will be the movement or turning arc of the bellcrank 77 before stopping.

As the bellcrank turns, it carries bodily with it a lever 80, referred to as the "trip lever," pivoted at 81 in one arm of the bellcrank. Under the top wall of housing 5 is a lever 82 pivoted at 83 and having a pin 84 that projects upwardly into a cam slot 85 in a disc 86. This disc is part of the external dial 8, and when the latter is rotated to bring any selected numeral thereon to the index mark (Fig. 1), lever 82 will be moved forwardly if the speed selected is high, and rearwardly if the speed is to be slow, thus acting as an adjustable timing stop. It is to be understood that curtain RC is moving across aperture A during the above-described operation.

As the bellcrank 77 carries the trip lever rearwardly, upstanding lugs 87 on the latter strike lever 82 and stop. The left end of the trip lever then continues to move rearwardly until it meets the part 73 of lever 70. Further movement of the bellcrank, which continues until pin 79 strikes the cam, carries the curtain latch lever 70 rearwardly and disengages the dog 67 from pawl 64. Spring 65 immediately causes pawl 64 to engage the ratchet 66, so that from this point both curtains FC and RC move across aperture A together under the pull of their respective foot rollers.

The parts are so proportioned that the pin 79 stops against the cam just as the lever 70 is moved to the point where dog 67 leaves pawl 64. The position of lever 82 governs this result, and therefore controls all automatic speeds indicated on the dial 8, viz., 1/25 to 1/1600 second. Obviously, the further forward the lever 82 is moved, the sooner will the pawl 64 be released and the narrower will be the slit S, because lever 80 will have to move a shorter distance before being intercepted. As dial 8 is turned clockwise, lever 82 is advanced forwardly and increased speeds are obtained because dog 67 is released sooner, and as lever 82 is moved rearwardly by turning dial 8 counter-clockwise, lever 80 will have to travel farther before dog 67 is disengaged from pawl 64, that is, the edge E of curtain RC will have a greater lead over edge G of curtain FC. At a speed of 1/25 second for instance, edge E will have completely passed across frame A at the moment when dog 67 is disengaged.

Slow automatic exposures

For making automatic exposures of 1/10, 1/5, 1/2, and 1 second, as calibrated on dial 7, the operator sets the 1/25 figure on dial 8 at the index mark and turns dial 7 to the required slower speed. A pin 90 on the bottom of dial 7 (Fig. 15) enters one end of a regulator lever 91 that has a slot 92 at its other end, with a guide pin 93 therein, so that as dial 7 is rotated, the regulator 91 will have a somewhat circular motion from side to side and from front to rear. A depending pin 94 is adapted to strike a lever 95 (Fig. 22) having a flat slotted base portion 96 resting on the top wall 2 and slidably retained by a headed stud 97. Lever 95, mentioned hereinafter as the retard member, has a lug 98 that is adapted to be engaged by pin 94 when dial 7 is set at I. Dial 7 must be so set when dial 8 is indexed at speeds from 1/25 to 1/1600.

The right end of lever 95 is bent down and extended at 99 and carries a pivoted rack piece 100 that is pressed by a spring 101 toward a ratchet 102 on one member of a gear train designated as a whole by numeral 103. This gear train is similar to that shown in my copending application 174,443 before mentioned, and is governed by a pallet 104 and driven by a spring 105, that may be wound by the crank 9 connected by gears 106 to the head shaft 107 of the gear train. A one-way clutch, not shown, is provided in the gear train, whereby only a part thereof may be operated, as explained in the above-mentioned application.

Retard member 95 is urged rearwardly and toward the right by a spring 108, which tends to return it to the position shown in Fig. 9. Wrapped around the hub of gear 42 and anchored in plate M is a stiff torsion spring 109. A pin 110 projecting upwardly from cam 75 strikes this spring as the cam approaches the latched position (rotating clockwise) when the shutter is being wound, and forces the extended free end 111 of the spring away from the depending portion 112 of retard member 95 which the end 111 is normally forcing toward the left. When the cam 75 begins to rotate counterclockwise after pawl 48 is kicked off by release member 59, the pin 110 moves to the left away from the end 111 and the latter then overcomes spring 108 carrying the retard member toward the left, dragging rack 100 against ratchet 102, thereby rotating all the gear train from the one-way clutch to the pallet 104. The gear train thus acts as a brake so that some time elapses before the rack passes over and off from the ratchet, the extent of this time being determined by the initial position of retard member 95. The retard member may be moved by the spring 108 to the right only until lug 98 strikes pin 94. Therefore if pin 90 is at the extreme right of its travel, that is, if dial 7 is set at I, the rack 100 will have maximum travel, or its whole length, over ratchet 102 and curtain FC will be released in 1 second after the release of curtain RC. If pin 90 is at the other extreme of its travel, rack 100 will not only be moved farther to the left, but the contour of slot 92 is such that control member 91 will be further forward, and pin 94 then will hold retard member 95 in such a position that the rack cannot swing about its pivot far enough to contact the ratchet 102, an upturned lug 100a limiting the rearward movement of said rack. Between these two above-described extremes the rack 100 may engage the ratchet 102 from 1/10 second to 1/2 second in accordance with the setting of dial 7.

Other parts, now to be described, also cooperate with retard member 95 to accomplish all of the

"slow automatic" exposures, and these parts are also involved in the operation for "time" exposures.

A detent 120 is pivoted on one of the posts 61 and is urged clockwise by a spring 121. A pin 122 on the bottom of this detent is thus forced against a cam edge 123 on the portion 96 of member 95. Therefore, if member 95 is carried by spring 111 far enough toward the left, the cam edge 123 forces pin 122 forwardly and swings the upturned end 124 of detent 120 beyond the outermost portion of cam 75. A square pin 125 projecting downwardly from cam 75 will strike the end 124 of the detent after cam 75 has completed about ¾ of a revolution, viz: when edge E of curtain RC has passed completely across exposure aperture A, unless the retard member 95 has been moved far enough to the left to free end 124 completely out of the path of pin 125. This has the effect of stopping the gears 42, 45 and 46 and therefore the spool shaft 34, before the end of trip lever 80 comes into contact with portion 73 of latch lever 70 to release the curtain FC.

After the pin 125 has come to rest against the upturned end 124 of detent 120, the end 111 of spring 109 continues to exert pressure and to carry retard member 95 toward the left. Then, according to the position of lever 91, and therefore the extent of engagement between rack 100 and ratchet 102, a greater or less time will elapse before the cam edge 123 forces the pin 122 and detent 120 forward far enough to move the end 124 out of the path of pin 125, so that cam 75 may complete its revolution. When this occurs, the cycle previously described is accomplished, that is, the curtains RC and FC are wound onto their respective foot rollers, closing aperture A. Fig. 20 indicates the relative position of the detent 120 and pin 125 just as the detent is about to be moved clear of the pin.

When set for exposures of higher speeds than 1/5 second, up to 1/25, the regulator 91 will occupy a position farther to the left for each successively higher indicated speed. The pin 94 will then force retard member 95 correspondingly to the left by striking lug 98 and at the same time the movement of the regulator member as guided by pin 93 will cause the rack 100 to engage ratchet 102 for a shorter time until at 1/25 there will be no engagement of the rack and ratchet. The detent 120 under the above conditions is forced further forward as retard member 95 is forced to the left, so that end 124 of the detent is very nearly clear of pin 125 as the latter approaches it. The effect on the curtains then will be as before described, that FC is released at the instant the edge E of RC has completed its travel across aperture A.

Time exposures

The release button 55 must be pressed twice to complete a time exposure, as in most shutters. The first movement causes release member 59 to trip pawl 40 as before described permitting curtain RC to move across aperture A. When set at T, the dial 7 swings the regulator 91 so that it occupies the position shown in Fig. 15.

Above the release member 59 is a flat slider 126, slotted at 127 so that it may be moved laterally on the pivot 60. In the front edge of part 126 is a notch 128, affording at its left end a shoulder 129. The latter is adapted to be engaged by a pin 130 projecting downwardly from retard member 95. Slider 126 is urged toward the right and its normal position (Fig. 5) by a light spring, not shown. At its left end is a downturned lug 131 (Fig. 18).

With the parts in the position of Fig. 15, it should be noted that pin 130 lies against shoulder 129, and that the cam 75 has turned until pin 125 has been stopped by end 124 of detent 120. At this time, curtain RC has passed across aperture A and the shutter is "open." Spring end 111 carries retard member 95 toward the left, and pin 130 on said member carries slider 126 with it until the right end of slot 127 strikes the head of pivot 60, and then neither of the parts 126 or 95 may move further. Under the condition above attained, lug 131 has attained a position in line with an arm 132 on release member 59. Retard member 95 has not been carried far enough to the left to push detent lug 124 out of the path of pin 125, so that the cam 75 cannot complete its revolution to release curtain FC.

If button 55 is now depressed again, the arm 132 on release member 59 engages lug 131 and swings slider 126 clockwise about pivot 60. As pin 130 now lies against the back of notch 128, and as said pin is fixed in member 95, the latter is also swung about its pivot 97, thus carrying detent 120 forward sufficiently to clear the pin 125. Cam 75 is then free to complete its full revolution, permitting bell crank 77 to swing trip lever 80 and disengage dog 67 as before described, and permitting curtain FC to be drawn across aperture "A" to close the shutter. Slider 126 and the other parts will be returned to their normal positions (Fig. 5) by their respective springs as soon as the operator raises his finger from button 55.

Delayed action mechanism

It is frequently desirable to have a time interval elapse between the depression of the finger button 55 and the actual release of the shutter curtains from the wound position. For this purpose the gear train 103 and its pallet 104 is interposed, together with a cam 113 that is arranged to interfere with the free movement of release member 59. Cam 113 is fixed to the head shaft 107 that is driven by spring 105 (Fig. 21). This spring is wound, as previously mentioned, by the operator moving crank 9 on the top of the camera from the position shown in Figs. 5 and 17 to the position shown in Fig. 1. During this movement, transmitted to shaft 107 through gears 106, a beveled edge 114 on cam 113 rides over a resilient upturned lug 116 on release member 59 (Figs. 10 and 17) and when the winding movement is completed, (about 120 degrees of movement of crank 9) the lug 116 snaps up in front of step 117 on the cam. The latter is thus locked against return to the unwound position until release member 59 is moved to the left.

If the operator desires to enter the scene himself, or if for some reason he wishes a delayed exposure, he moves crank 9 to the wound position and the parts are then placed as in Fig. 5. It is to be understood that in the gear train at some point between the shaft 107 and the pallet 104 there is a one-way clutch 118, as previously mentioned, not shown in detail, which permits part of the train to be driven by the rack 100 and which allows the spring 105 to be wound without turning the gears that lie between the clutch and the pallet.

Therefore as the spring 105 unwinds it drives the entire gear train and results in a very slow rotation of the cam 113 clockwise. However, this unwinding cannot occur with the lug 116 ob-

structing the cam 113 at step 117. If the button 55 is depressed lug 116 is pulled away from step 117 as release member 59 moves toward the left, and the gear train begins to revolve. The cam 113 has a hooked arm 115 that prevents release member 59 from being moved far enough to strike pawl 40. The spring 62 on the pivot 60 is tending at all times to force the release member counterclockwise, thus pressing the lug 116 against the cam 113 after the step 117 has moved away from said lug. When the operator releases button 55 the lug 116 rides on the spiral edge 119, and as the spring 105 is much more powerful than the spring 62, the edge 119 gradually forces member 59 to the left, until the portion 63 frees the pawl 40 from the toothed catch 38 and releases the shutter.

The bellcrank 77, under the action of spring 78, constantly tends to move pin 79 against the periphery of cam 75. During the movement of the shutter curtains for an exposure this is necessary, because the cam serves as a governor or limiting factor by permitting the trip lever 80 to be carried against latch member 70 only as fast as the cam will revolve. On the clockwise or winding operation the pin 79 should be clear of the cam 75, and therefore a latch is provided, shown in detail in Fig. 12. This latch 133 is pivoted at 134. A pin 135 on the top of cam 75 strikes the rear edge of arm 136 of latch 133 when the cam is rotating clockwise at the end of the winding revolution, and thereby throws the other arm of the latch 133 which carries a hook 137 away from the cam. Near the end of the counterclockwise revolution of the cam 75 (on the release operation) pin 135 strikes the front edge of arm 136 and moves the hook 137 into the path of pin 79. This prevents spring 78 from forcing said pin toward the cam. When the shutter is rewound, pin 135 again swings latch 133 counterclockwise about pivot 134 and removes the hook 137 from the path of pin 79, the parts thus being restored to their normal positions, shown in Fig. 5.

Exposure counter

Included with the means for winding the shutter mechanism is a device which enables the operator to ascertain the number of exposures made or the unexposed frames of film remaining in the camera.

On the raised center portion of housing 5 (Figs. 1, 2, and 3) is a knob 138 which is part of a number-bearing dial 139 having ratchet teeth 140 on its underside within the housing. Numbers on this dial are visible through a window 141. On the top wall 2 is a slidable bar 142, shown in separate detail in Fig. 11, suitably guided for movement parallel to the film plane, and having an upturned end 143 which carries a hooked spring 144. The latter, when the slide bar 142 is moved to the left, engages one of the teeth 140 and rotates the dial 139. The arrangement of parts whereby the dial is advanced only one digit at each complete cycle of the shutter operation is as follows: An upstanding lug 145 at the left end of slide 142 is the same distance from the center of shaft 30 as the pivot 41 of pawl 40. This pivot is extended downwardly as a square pin 146. When the shutter is wound, the last few degrees of the clockwise rotation of gear 42 carries pin 146 against the right side of lug 145 and moves slider 142 to the left, and hook 144 engages ratchet 140 and rotates dial 139 one tooth to the next digit. When the shutter is released and gear 42 makes a full revolution counterclockwise, the pin 146 during the last few degrees of this revolution strikes the left side of lug 145 and moves slider 142 toward the right, into position to engage the next tooth on ratchet 139. The location of slot 147 in the slider 142 is such that its right end, when in contact with guide pin 148 (Fig. 9) serves to limit the clockwise rotation of gear 42 and therefore stops pawl 40 at exactly the position in which it will snap onto cam tooth 38 to latch the gears in the wound position.

It should be noted (Fig. 9) that the orbit of pin 146 is inside of that followed by pin 125, and the latter therefore travels clear of both pin 146 and lug 145 as gear 42 revolves.

I claim:

1. In a focal plane shutter, the combination with a pair of curtain shutters, spring driven rollers, one for each curtain, supporting rollers for the opposite ends of said curtains, separate means for holding each curtain in a tensioned position, a releasing means for each curtain operable one after the other, and means fo restablishing a slit between said curtains after one curtain is released and including a clutch means between the rollers for holding ends of the curtains, said clutch comprising a pawl operable only after movement of one curtain and carried on one roller and a ratchet on the other roller, the ratchet including a plurality of unevenly arranged teeth spaced to space the two curtains to form slots of predetermined widths between the ends of the curtains to effect different predetermined exposures.

2. In a focal plane shutter, the combination with a pair of curtain shutters, spring driven rollers, one for each curtain, supporting rollers for the opposite ends of said curtains, separate means for holding each curtain in a tensioned position, a releasing means for each curtain operable one after the other, and means for establishing a slit between said curtains after one curtain is released and including a clutch means between the rollers for holding ends of the curtains, said clutch comprising a pawl on one roller and a ratchet on the other roller, the ratchet including a plurality of unevenly arranged teeth spaced to space the two curtains to form slots of predetermined widths between the ends of the curtains to effect different predetermined exposures, the roller carrying the pawl including a notch, and a pawl engageable with the notch constituting said means for holding one curtain in a tensioned position.

3. In a focal plane shutter, the combination with a pair of curtain shutters, spring driven rollers, one for each curtain, supporting rollers for the opposite ends of said curtains, separate means for holding each curtain in a tensioned position, a releasing means for each curtain operable one after the other, and means for establishing a slit between said curtains after one curtain is released and including a clutch means between the rollers for holding ends of the curtains, said clutch comprising a pawl on one roller and a ratchet on the other roller, the ratchet including a plurality of unevenly arranged teeth spaced to space the two curtains to form slots of predetermined widths between the ends of the curtains to effect different predetermined exposures, the roller carrying the pawl including a notch, and a pawl engageable with the notch constituting said means for holding one curtain in a tensioned position, the pawl engaging the notch also engaging the pawl for clutching the

two curtains, and means for releasing the notch engaging pawl to release the curtains for exposure.

4. In a focal plane shutter, the combination with a pair of curtain shutters, spring driven rollers, one for each curtain, supporting rollers for the opposite ends of said curtains, separate means for holding each curtain in a tensioned position, a releasing means for each curtain operable one after the other, and means for establishing a slit between said curtains after one curtain is released and including a clutch means between the rollers for holding ends of the curtains, said clutch comprising a pawl on one roller and a ratchet on the other roller, the ratchet including a plurality of unevenly arranged teeth spaced to space the two curtains to form slots of predetermined widths between the ends of the curtains to effect different predetermined exposures, the roller carrying the pawl including a notch, and a pawl engageable with the notch constituting said means for holding one curtain in a tensioned position, a spring tending to turn the clutch pawl out into the ratchet, the pawl engaging the notched roller being adapted to hold the clutch pawl away from the ratchet, and means for releasing the notch pawl, thereby allowing the clutch pawl to function under its spring and allowing the spring driven rollers to move the curtains to make an exposure.

5. In a focal plane camera, the combination with a pair of curtains, spring rollers supporting one end of each curtain, rollers supporting the opposite ends of each curtain, mechanism for varying the relationship of the curtains for forming a slot between the ends of the curtains, mechanism including the spring rollers for moving the curtains to make an exposure, a timing gear train, a separate power spring adapted to drive the gear train, connections between the gear train and mechanism for moving the curtains for controlling the latter by the former and a single means for winding up the two spring rollers and the one gear train spring.

6. In a focal plane camera, the combination with a pair of curtains, spring rollers supporting one end of each curtain, rollers supporting the opposite ends of each curtain, mechanism for varying the relationship of the curtains for forming a slot between the ends of the curtains, mechanism including the spring rollers for moving the curtains to make an exposure, a timing gear train, a separate power spring adapted to drive the gear train, connections between the gear train and mechanism for moving the curtains for controlling the latter by the former, a single means for winding up the two curtain spring rollers and the gear train spring, and latches for holding the curtain spring rollers under tension.

7. In a focal plane camera, the combination with a pair of curtains, spring rollers supporting one end of each curtain, rollers supporting the opposite ends of each curtain, mechanism for varying the relationship of the curtains for forming a slot between the ends of the curtains, mechanism including the spring rollers for moving the curtains to make an exposure, a timing gear train, a separate power spring adapted to drive the gear train, connections between the gear train and mechanism for moving the curtains for controlling the latter by the former, a single means for winding up the two curtain spring rollers and the gear train spring, separate latches for holding the two curtains against movement, mechanism for releasing one latch after the other to form a slot between the curtains and to release both curtains to make an exposure, and connections between the gear train and one latch for tripping the second latch by means of the power operated gear train to control the duration of an exposure.

8. In a focal plane camera, the combination with a pair of curtains, spring rollers supporting one end of each curtain, rollers supporting the opposite ends of each curtain, mechanism for varying the relationship of the curtains for forming a slot between the ends of the curtains, mechanism including the spring rollers for moving the curtains to make an exposure, a timing gear train, a separate power spring adapted to drive the gear train, connections between the gear train and mechanism for moving the curtains for controlling the latter by the former, a single means for winding up the two curtain spring rollers and the gear train spring, separate latches for holding the two curtains against movement, mechanism for releasing one latch after the other to form a slot between the curtains and to release both curtains to make an exposure, and connections between the gear train and one latch for tripping the second latch by means of the power operated gear train to control the duration of an exposure, said last named connections including a slidable mounted retard member directly engaged by said gear train operating spring.

9. In a focal plane camera, the combination with a pair of curtains, spring rollers supporting one end of each curtain, rollers supporting the opposite ends of each curtain, mechanism for varying the relationship of the curtains for forming a slot between the ends of the curtains, mechanism including the spring rollers for moving the curtains to make an exposure, a timing gear train, a separate power spring adapted to drive the gear train, connections between the gear train and mechanism for moving the curtains for controlling the latter by the former, a single means for winding up the two curtain spring rollers and the gear train spring, separate latches for holding the two curtains against movement, mechanism for releasing one latch after the other to form a slot between the curtains and to release both curtains to make an exposure, and connections between the gear train and one latch for tripping the second latch by means of the power operated gear train to control the duration of an exposure, said last named connections including a slidable mounted retard member directly engaged by said gear train operating spring, said retard member including a cam for engaging and releasing the second curtain latch.

10. In a focal plane camera, the combination with a pair of curtains, spring rollers supporting one end of each curtain, rollers supporting the opposite ends of each curtain, mechanism for varying the relationship of the curtains for forming a slot between the ends of the curtains, mechanism including the spring rollers for moving the curtains to make an exposure, a timing gear train, a separate power spring adapted to drive the gear train, connections between the gear train and mechanism for moving the curtains for controlling the latter by the former, a single means for winding up the two curtain spring rollers and the gear train spring, separate latches for holding the two curtains against movement, mechanism for releasing one latch after the other to form a slot between the curtains and to release both curtains to make an exposure, and

connections between the gear train and one latch for tripping the second latch by means of the power operated gear train to control the duration of an exposure, said last named connections including a slidable mounted retard member adapted to engage and release the second curtain latch, an arm pivotally mounted on the retard member and including ratchet teeth, and a ratchet wheel included in the gear train for engaging the ratchet teeth whereby the gearing may delay the release of the curtain latch and consequently control the duration of exposure.

11. In a focal plane camera, the combination with a pair of curtains, spring rollers supporting one end of each curtain, rollers supporting the opposite ends of each curtain, mechanism for varying the relationship of the curtains for forming a slot between the ends of the curtains, mechanism including the spring rollers for moving the curtains to make an exposure, a timing gear train, a separate power spring adapted to drive the gear train, connections between the gear train and mechanism for moving the curtains for controlling the latter by the former, a single means for winding up the two curtain spring rollers and the gear train spring, separate latches for holding the two curtains against movement, mechanism for releasing one latch after the other to form a slot between the curtains and to release both curtains to make an exposure, and connections between the gear train and one latch for tripping the second latch by means of the power operated gear train to control the duration of an exposure, said last named connections including a slidable mounted retard member adapted to engage and release the second curtain latch, an arm pivotally mounted on the retard member and including ratchet teeth and a ratchet wheel included in the gear train for engaging the ratchet teeth whereby the gearing may delay the release of the curtain latch and consequently control the duration of exposure, a speed setting dial for the shutter, a pin and slot connection between the speed setting dial and the sliding retard member for controlling the effective engagement of the ratchet teeth and ratchet wheel.

12. In a focal plane camera, the combination with a pair of curtains, spring rollers supporting one end of each curtain, rollers supporting the opposite ends of each curtain, mechanism for varying the relationship of the curtains for forming a slot between the ends of the curtains, mechanism including the spring rollers for moving the curtains to make an exposure, a timing gear train, a separate power spring adapted to drive the gear train, connections between the gear train and mechanism for moving the curtains for controlling the latter by the former, a single means for winding up the two curtain spring rollers and the gear train spring, separate latches for holding the two curtains against movement, mehanism for releasing one latch after the other to form a slot between the curtains and to release both curtains to make an exposure, and connections between the gear train and one latch for tripping the second latch by means of the power operated gear train to control the duration of an exposure, said last named connections including a slidable mounted retard member adapted to engage and release the second curtain latch, an arm pivotally mounted on the retard member and carrying ratchet teeth, a ratchet wheel carried by the train gear, a spring pressing the ratchet teeth together whereby movement of the retard member on one direction may operate said gear train and movement in an opposite direction may cause the spring to flex and the pivoted arm to slide idly over the ratchet teeth.

13. In a focal plane camera, the combination with a pair of curtains, spring rollers supporting one end of each curtain, rollers supporting the opposite ends of each curtain, mechanism for varying the relationship of the curtains for forming a slot between the ends of the curtains, mechanism including the spring rollers for moving the curtains to make an exposure, a timing gear train, a separate power spring adapted to drive the gear train, connections between the gear train and mechanism for moving the curtains for controlling the latter by the former, a single means for winding up the two curtain spring rollers and the gear train spring, separate latches for holding the two curtains against movement, mechanism for releasing one latch after the other to form a slot between the curtains and to release both curtains to make an exposure, and connections between the gear train and one latch for tripping the second latch by means of the power operated gear train to control the duration of an exposure, said last named connections including a slidable mounted retard member adapted to engage and release the second curtain latch, an arm pivotally mounted on the retard member and carrying ratchet teeth, a ratchet wheel carried by the gear train, a spring pressing the ratchet teeth together whereby movement of the retard member in one direction may operate said gear train and movement in an opposite direction may cause the spring to flex and the pivoted arm to slide idly over the ratchet teeth, and means including a speed setting dial for varying the position of the retard member relatively to the second curtain latch member for altering the release time of said curtain to vary the exposure.

14. In a focal plane shutter, a pair of curtains comprising a leader curtain and a follower curtain, spring rollers one carrying one end of each curtain, rollers carrying the opposite end of each curtain, a latch for the leader curtain, a latch for the follower curtain, a retard member mounted to move to and from a position for releasing the follower curtain latch, a spring for driving the retard member in one direction, and means for delaying movement of the retard member, said means being under the influence of the spring, means for releasing the retard member in timed relation to release of the latch for the leader curtain and means for holding both curtains in a fixed position during operation of the retard.

15. In a focal plane shutter, a pair of curtains comprising a leader curtain and a follower curtain, spring rollers one carrying one end of each curtain, rollers carrying the opposite end of each curtain, a latch for the leader curtain, a latch for the follower curtain, a retard member mounted to move to and from a position for releasing the follower curtain latch, a spring for driving the retard member in one direction, means for setting said driving spring, a spring for moving the retard member in an opposite direction but of insufficient strength to materially retard movement by the set driving spring whereby the retard may be moved by the driving spring against the action of the second mentioned spring.

16. In a focal plane shutter, a pair of curtains comprising a leader curtain and a follower curtain, spring rollers one carrying one end of each curtain, rollers carrying the opposite end of each

curtain, a latch for the leader curtain, a latch for the follower curtain, a retard member mounted to move to and from a position for releasing the follower curtain latch, a spring for driving the retard member in one direction, means for setting said driving spring, a second spring for moving the retard member in an opposite direction but of such strength that by setting the driving spring the retard will move against the action of the second spring, connections between the springs of the spring rollers and the driving spring for the retard member whereby said means for setting the driving spring may set the spring roller springs.

17. A gear retard for focal plane shutters comprising a retard member slidably mounted, a pivotally mounted rack of ratchet teeth carried thereby, a gear train, a ratchet wheel mounted to turn with the gear train, spring means for holding the ratchet rack and ratchet wheel in mesh for movement in one direction, means for varying the degree of sliding movement of the retard member, the teeth of the rack and ratchet wheel being shaped to present inclined surfaces to each other, whereby movement in another direction may react against the spring moving the rack on its pivot, whereby the teeth may slide over each other.

18. In a focal plane shutter, the combination with a first and a second curtain, a spring roller attached to one end of each curtain, a roller attached to the opposite end of each curtain, a movable means for setting the springs of the spring rollers at the same time, a latch for holding each of the two curtains against movement when the springs are set, means for tripping the first curtain latch before the second curtain latch, a timing gear train for determining the speed of a retarded exposure, a slidable retard member adapted to operably engage the gear train, a spring for driving the retard member and gear train in one direction, said means for setting the spring rollers being adapted to also set the retard member spring, a second spring tending to hold the retard member in an idle position of rest, and means for tripping the second curtain latch operable through the sliding retard member whereby an exposure determined by the timing gear train may be made.

19. In a focal plane shutter, the combination with a first and a second curtain, a spring roller attached to one end of each curtain, a roller attached to the opposite end of each curtain, a movable means for setting the springs of the spring rollers at the same time, a latch for holding each of the two curtains against movement when the springs are set, means for tripping the first curtain latch before the second curtain latch, a timing gear train for determining the speed of a retarded exposure, a slidable retard member adapted to operably engage the gear train, a spring for driving the retard member and gear train in one direction, a second spring tending to hold the retard in an idle position of rest, means operable through the retard for tripping the second curtain spring latch, said means for setting the curtain springs including a means for simultaneously setting the retard driving spring, whereby movement of the setting means may tension each curtain spring and the retard driving spring.

20. In a focal plane shutter, the combination with a first and a second curtain, a spring roller attached to one end of each curtain, a roller attached to the opposite end of each curtain, a movable means for setting the springs of the spring rollers at the same time, a latch for holding each of the two curtains against movement when the springs are set, means for tripping the first curtain latch before the second curtain latch, a timing gear train for determining the speed of a retarded exposure, a slidable retard member adapted to operably engage the gear train, a spring for driving the retard member and gear train in one direction, a second spring tending to hold the retard in an idle position of rest, means operable through the retard for tripping the second curtain spring latch, said means for setting the curtain springs including a means for simultaneously setting the retard driving spring, whereby movement of the setting means may tension each curtain spring and the retard driving spring, the said means for tripping said first curtain latch comprising a manually operable shutter trigger, and the said means for tripping the second curtain including a latch, a cam carried by the retard member adapted to engage and release the latch, and mechanism controlled by the latch for engaging and operating the second curtain latch.

21. In a focal plane shutter, the combination with a first and a second curtain, a spring roller attached to one end of each curtain, a roller attached to the opposite end of each curtain, a movable means for setting the springs of the spring rollers at the same time, a latch for holding each of the two curtains against movement when the springs are set, means for tripping the first curtain latch before the second curtain latch, a timing gear train for determining the speed of a retarded exposure, a slidable retard member adapted to operably engage the gear train, a spring for driving the retard member and gear train in one direction, a second spring tending to hold the retard in an idle position of rest, means operable through the retard for tripping the second curtain spring latch, said means for setting the curtain springs including a means for simultaneously setting the retard driving spring, whereby movement of the setting means may tension each curtain spring and the retard driving spring, said retard including a rack adapted to engage a gear of the gear retard, a manually adjustable dial graduated into units of automatic exposures, and connections between said dial and the movable retard for determining the contact of the rack and gear retard and consequently the duration of exposure.

22. In a focal plane shutter, the combination with a first and a second curtain, a spring roller attached to one end of each curtain, a roller attached to the opposite end of each curtain, a movable means for setting the springs of the spring rollers at the same time, a latch for holding each of the two curtains against movement when the springs are set, means for tripping the first curtain latch before the second curtain latch, a timing gear train for determining the speed of a retarded exposure, a slidable retard member adapted to operably engage the gear train, a spring for driving the retard member and gear train in one direction, a second spring tending to hold the retard in an idle position of rest, means operable through the retard for tripping the second curtain spring latch, said means for setting the curtain springs including a means for simultaneously setting the retard driving spring, whereby movement of the setting means may tension each curtain spring and the retard driving spring, the said means for tripping said first

curtain latch comprising a manually operable shutter trigger, and the said means for tripping the second curtain including a latch, a cam carried by the retard member adapted to engage and release the latch and mechanism released by the latch adapted to engage and release the second curtain latch, means for controlling the speed of the retard through the gear train, and an adjustable dial adapted to move the retard relative to the gear train to vary the effectiveness thereof and to render the retard ineffective.

JOSEPH MIHALYI.

CERTIFICATE OF CORRECTION.

Patent No. 2,203,657. June 4, 1940.

JOSEPH MIHALYI.

It is hereby certified that error appears in the printed specification of the above numbered patent requiring correction as follows: Page 2, first column, line 29, for "restarding" read --retarding--; page 3, first column, line 8, strike out "in the bottom of gear 29,"; page 8, first column, lines 72 and 73, claim 12, for the words "train gear" read --gear train--; and that the said Letters Patent should be read with this correction therein that the same may conform to the record of the case in the Patent Office.

Signed and sealed this 10th day of September, A. D. 1940.

Leslie Frazer,
Acting Commissioner of Patents.

(Seal)

CERTIFICATE OF CORRECTION.

Patent No. 2,203,657. June 4, 1940.

JOSEPH MIHALYI.

It is hereby certified that error appears in the printed specification of the above numbered patent requiring correction as follows: Page 2, first column, line 29, for "restarding" read --retarding--; page 3, first column, line 8, strike out "in the bottom of gear 29,"; page 8, first column, lines 72 and 73, claim 12, for the words "train gear" read --gear train--; and that the said Letters Patent should be read with this correction therein that the same may conform to the record of the case in the Patent Office.

Signed and sealed this 10th day of September, A. D. 1940.

Leslie Frazer,
Acting Commissioner of Patents.

(Seal)